Commercial Automatic Washers

Parts

"CE" Approved

Metered and Nonmetered Models

Refer to Page 3 for Model Numbers

Alliance Laundry Systems

www.comlaundry.com

Part No. 37988R2
November 2003

Table of Contents

Title	Page
Parts Ordering Information	2
Nameplate Location	2
Model Identification	3
Timer, Case and Plate	4
Timer, Meter Case and Service Door	6
Coin Drop Assembly and Front Plate, Meter Case and Service Door	8
Control Panel, Control Hood and Controls	10
Coin Drop, Meter Case and Service Door	12
Control Panel, Control Hood and Controls	14
Cabinet Top, Loading Door, Lid Lock and Shield	16
Out-of-Balance Switch	18
Motor, Mounting Bracket, Belt, Pump and Idler Assembly	20
Contactor Box, Relays, Transformer and Fuse Holders	22
Fuse Holders and Bracket	24
Inlet Hose, Fill Hose and Mixing Valve Mounting Bracket	26
Mixing Valve Assembly	28
Agitator, Drive Bell, Seal Kit, Washtub and Hub	30
Outer Tub, Cover and Pressure Hose	32
Transmission Assembly and Balance Ring	34
Transmission Assembly	36
Bearing Housing, Brake, Pulley and Pivot Dome	38
Drain Hose and Siphon Break Kit	40
Front Panel, Base Assembly and Cabinet Assembly	42
Mixing Valve and Motor Disconnect Blocks, Terminals and Terminal Extractor Tool	44
Power Cord and Terminals	46
Special Tools	48
Special Tools	50
Wire Harnesses and Wires	52
Parts Index	53

© Copyright 2003, Alliance Laundry Systems LLC

All rights reserved. No part of the contents of this book may be reproduced or transmitted in any form or by any means without the expressed written consent of the publisher.

Parts Ordering Information

If literature or replacement parts are required, contact the source from whom the machine was purchased or contact Alliance Laundry Systems at (920) 748-3950 for the name and address of the nearest authorized parts distributor.

For technical assistance, call (920) 748-3121.

Nameplate Location

When calling or writing about your product, be sure to mention model and serial numbers. Model and serial numbers are located on nameplate(s) as shown.

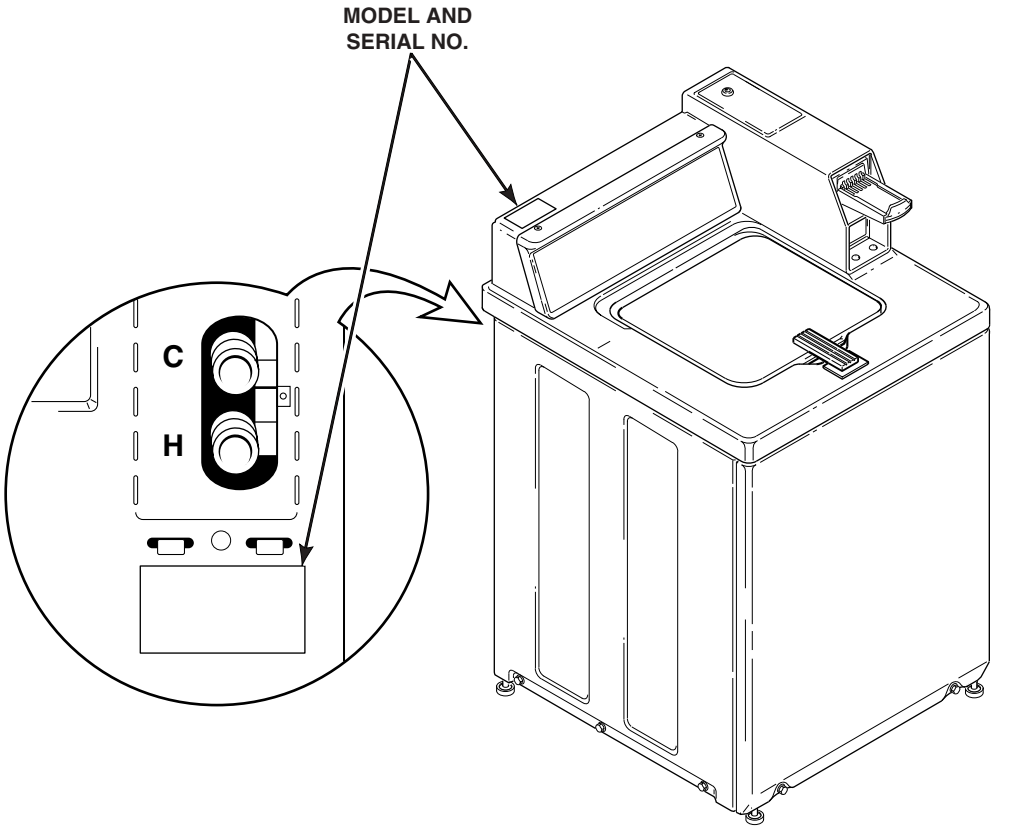

W302P_37988

© Copyright, Alliance Laundry Systems LLC – DO NOT COPY or TRANSMIT

Model Identification

Information in this manual is applicable to these washer models:

EC2011*A3059
EC2111*A3059
EC2211*A3059
EC2921*A3059
ZC2111*A3059
ZC2211*A3059
ZC2921*A3059

*** Add Letter To Designate Color. L - Almond W - White**

© Copyright, Alliance Laundry Systems LLC – DO NOT COPY or TRANSMIT

Timer, Case and Plate

Model EC2011*A3059

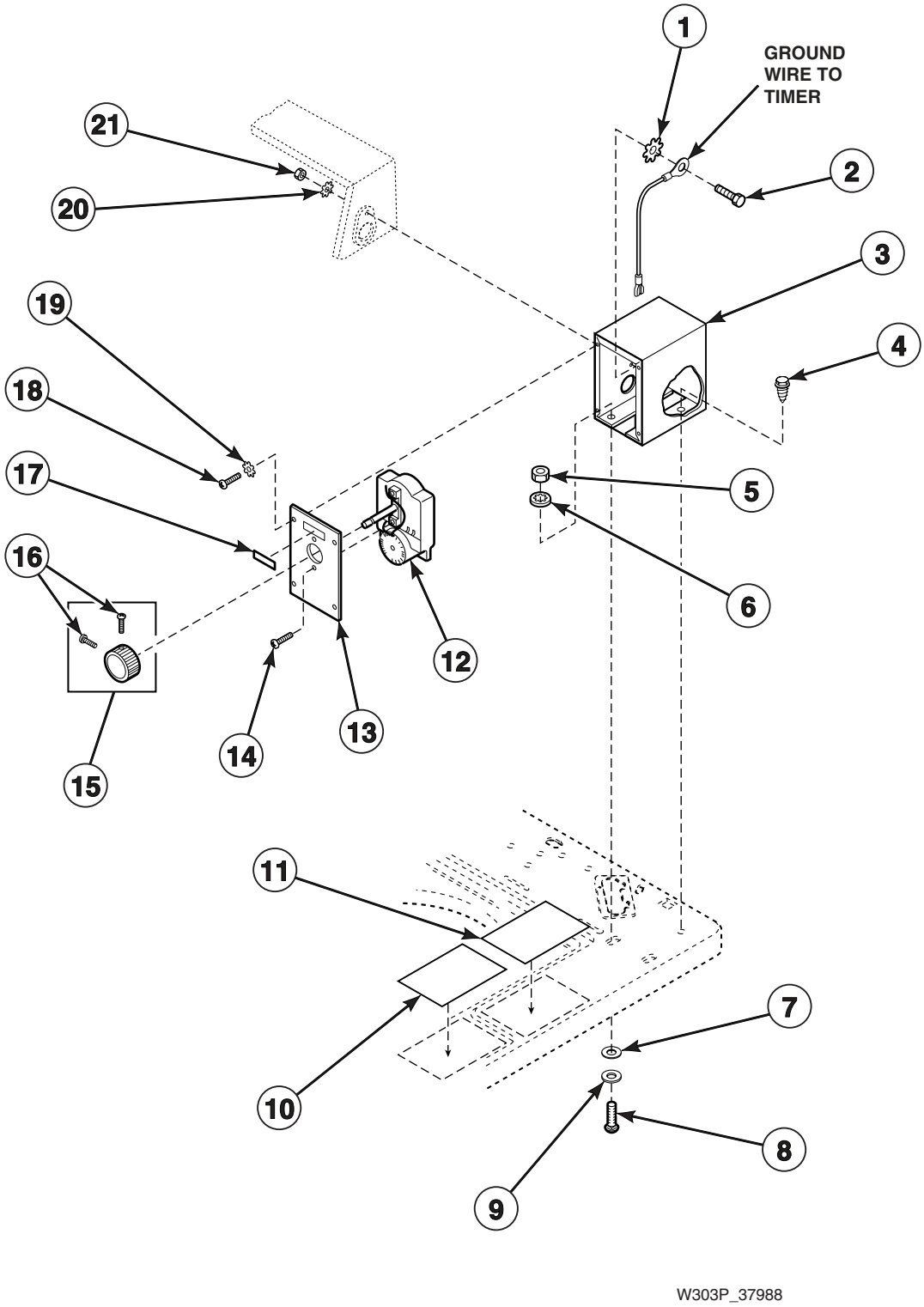

© Copyright, Alliance Laundry Systems LLC – DO NOT COPY or TRANSMIT

Timer, Case and Plate

REF	PART NO.	DESCRIPTION	COMMENTS
1	M400017	Lockwasher	
2	02916	Cap Screw	
3	37733W	Timer Case	
4	23962	Screw	
5	20275	Nut	
6	21456	Lockwasher	
7	23225	Washer	Vinyl
8	02505	Carriage Bolt	
9	30627	Washer	
10	37068	Sticker	
11	36592	Sticker	
12	36988	Timer Assembly	
13	31864W	Timer Plate	
14	27328	Screw	
15	26256	Timer Knob Assembly	
16	80399	Screw	
17	53738	Push-to-Start Sticker	
18	51778	Screw	
19	21734	Lockwasher	
20	02431	Lockwasher	
21	52566	Nut	

*** Add Letter To Designate Color. L - Almond W - White**

© Copyright, Alliance Laundry Systems LLC – DO NOT COPY or TRANSMIT

Timer, Meter Case and Service Door

Models EC2111*A3059, EC2211*A3059, ZC2111*A3059 and ZC2211*A3059

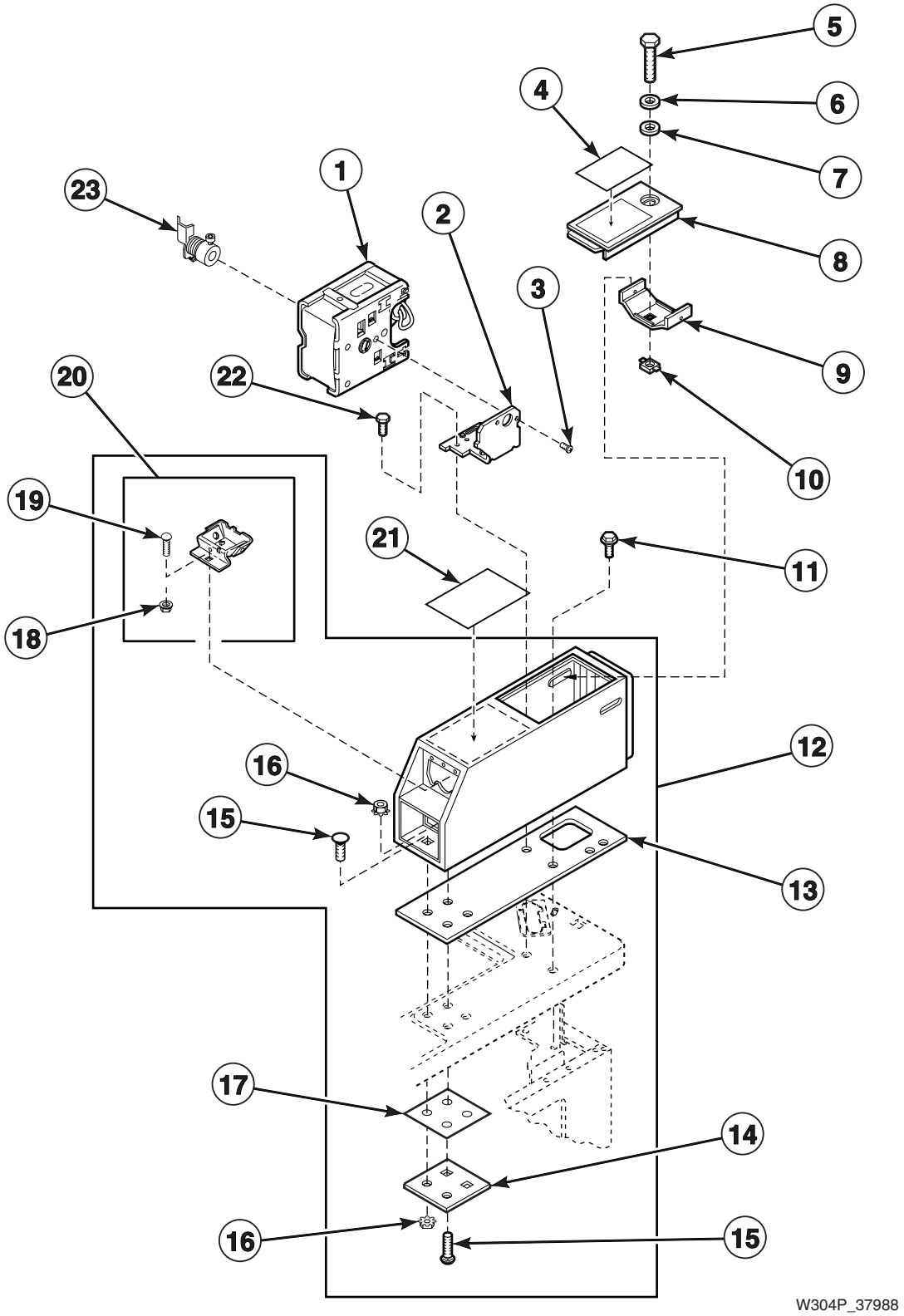

© Copyright, Alliance Laundry Systems LLC – DO NOT COPY or TRANSMIT

Timer, Meter Case and Service Door

REF	PART NO.	DESCRIPTION	COMMENTS
1	36986	Timer Assembly	Models EC2111*A3059 and ZC2111*A3059
	36987	Timer Assembly	Models EC2211*A3059 and ZC2211*A3059
2	35249	Timer Bracket	
3	21720	Screw	
4	37068	Sticker	
5	503673	Screw	
6	35917	Washer	Metal
7	35774	Washer	Vinyl
8	35798*	Service Door	
9	30642	Locking Bracket	
10	30647	Retainer Nut	
11	502431	Shoulder Screw	
12	524P3*	Meter Case	Includes items 13, 14, 15, 16, 17 and 20
13	26354	Meter Case Gasket	
14	35525	Bracket	
15	02505	Carriage Bolt	
16	29786	Locknut	
17	35526	Gasket	
18	29796	Nut	
19	29651	Bolt	
20	523P3	Coin Funnel Kit	Includes items 18 and 19
21	36592	Sticker	
22	36048	Screw	
23	29503	Clutch	

*** Add Letter To Designate Color. L - Almond W - White**

© Copyright, Alliance Laundry Systems LLC – DO NOT COPY or TRANSMIT

Coin Drop Assembly and Front Plate, Meter Case and Service Door

Old Style Airpax Coin Drop
Models EC2921*A3059 and ZC2921*A3059

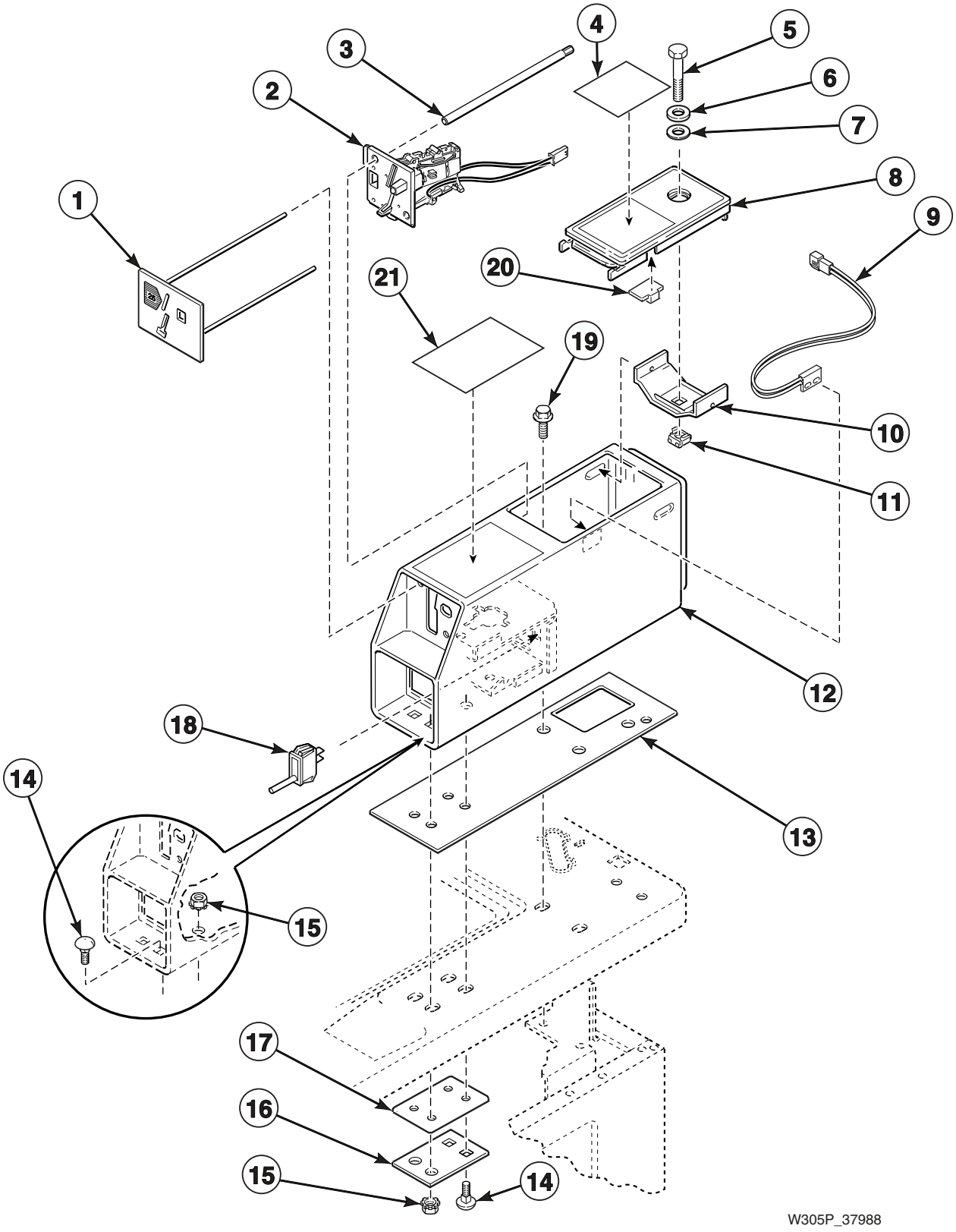

© Copyright, Alliance Laundry Systems LLC – DO NOT COPY or TRANSMIT

Coin Drop Assembly and Front Plate, Meter Case and Service Door

REF	PART NO.	DESCRIPTION	COMMENTS
1	501978	Coin Drop Front Plate	Thailand
	501966	Coin Drop Front Plate	Token 118-1
2	431631	Coin Drop Assembly	Australia
	M411706	Coin Drop Assembly	Belgium
	M411605	Coin Drop Assembly	France
	M411606	Coin Drop Assembly	Hong Kong
	M411708	Coin Drop Assembly	South Africa
	M411608	Coin Drop Assembly	South Korea
	M411707	Coin Drop Assembly	Taiwan
	M411709	Coin Drop Assembly	Thailand
	M411607	Coin Drop Assembly	Token 118-5
3	501365	Locking Rod	
4	37068	Sticker	
5	503673	Screw	
6	35917	Washer	Metal
7	35774	Washer	Vinyl
8	35798*	Service Door	
9	34599	Switch	
10	30642	Locking Bracket	
11	30647	Retainer Nut	
12	38542*P	Meter Case	
13	26354	Gasket	
14	02505	Carriage Bolt	
15	29786	Locknut	
16	35525	Bracket	
17	35526	Gasket	
18	504570	Switch	
19	36048	Screw	
20	501453	Magnet	
21	36592	Sticker	

*** Add Letter To Designate Color. L - Almond W - White**

© Copyright, Alliance Laundry Systems LLC – DO NOT COPY or TRANSMIT

Control Panel, Control Hood and Controls

Models EC2011*A3059, EC2111*A3059, EC2211*A3059 and ZC2111*A3059

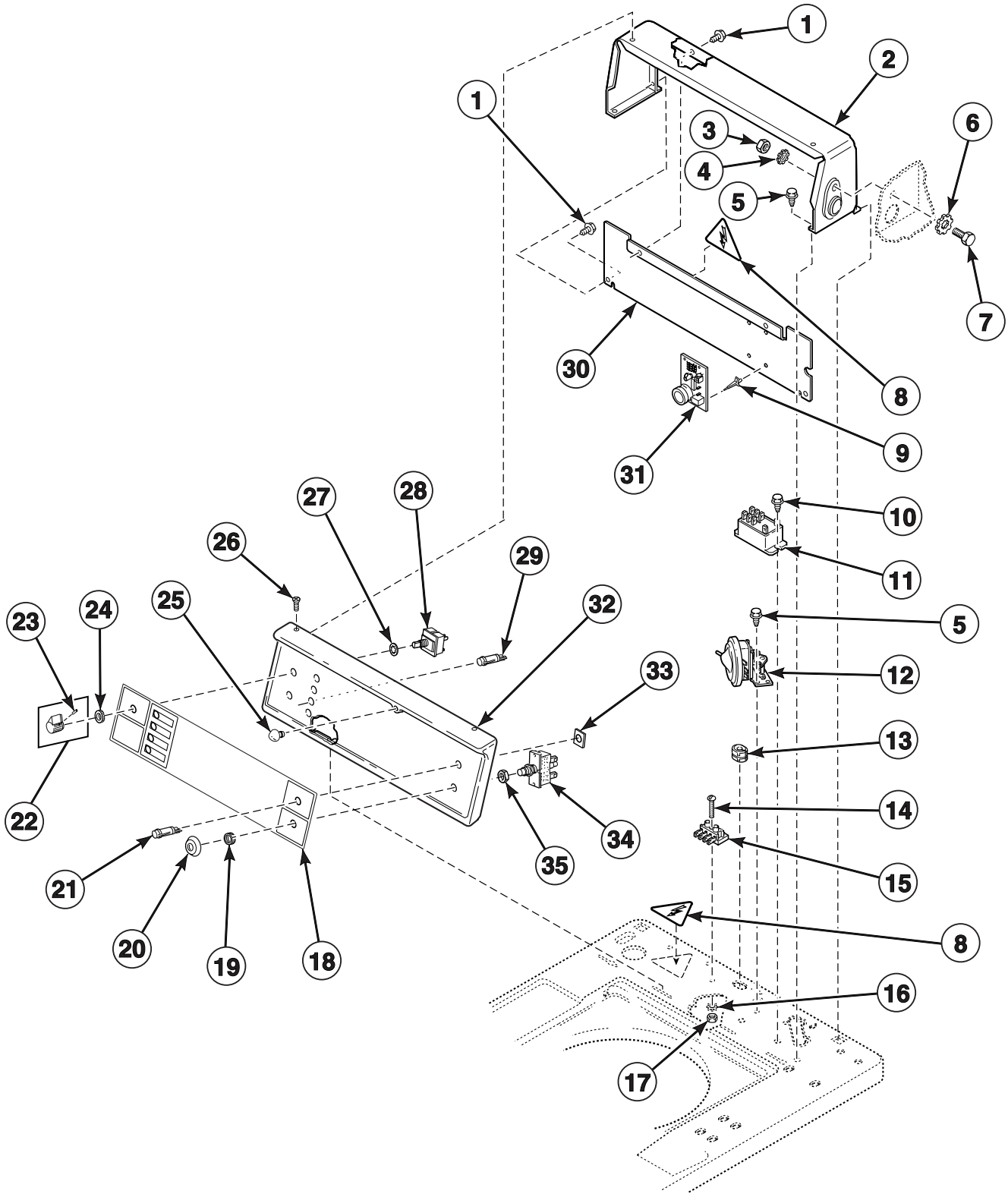

© Copyright, Alliance Laundry Systems LLC – DO NOT COPY or TRANSMIT

Control Panel, Control Hood and Controls

REF	PART NO.	DESCRIPTION	COMMENTS
1	23222	Screw	
2	37075*	Control Hood	
3	52566	Locknut	
4	02431	Lockwasher	
5	23962	Screw	
6	M400017	Lockwasher	
7	02916	Cap Screw	
8	502511	Sticker	
9	501523	Support	
10	501086	Screw	
11	502501	Relay	
12	35889	Pressure Switch	
13	36957	Strain Relief	
14	Q6516	Screw	
15	36841	Terminal Block	
16	21734	Lockwasher	
17	02788	Nut	
18	N/A	Control Panel Overlay	Model ZC2111*A3059
	36971	Control Panel Overlay	All other models
19	24206	Knurled Nut	
20	N/A	Switch Collar	
21	36968	Indicator Light	
22	39897	Control Knob Assembly	
23	N/A	Setscrew	
24	24205	Knurled Nut	
25	32648	Bumper	
26	500226	Screw	Phillips head
	35528	Screw	Torx head; Refer to *Special Tools* section for Torx Bit and Holder
27	91176	Lockwasher	
28	81799	Temperature Switch	
29	36967	Indicator Light	Unbalanced load
	37472	Indicator Light	In use
	36967	Indicator Light	Rinse/Spin
30	38267	Control Hood Rear Cover	
31	37269	Lid Lock Control	
32	36521*	Control Panel Frame	
33	34762	Push-On Clip	
34	55882	Push-to-Start Switch	
35	52947	Nut	

*** Add Letter To Designate Color. L - Almond W - White**

N/A = Part no longer available

© Copyright, Alliance Laundry Systems LLC – DO NOT COPY or TRANSMIT

Coin Drop, Meter Case and Service Door

New Style Munzprufer Coin Drop
Models EC2921*A3059 and ZC2921*A3059

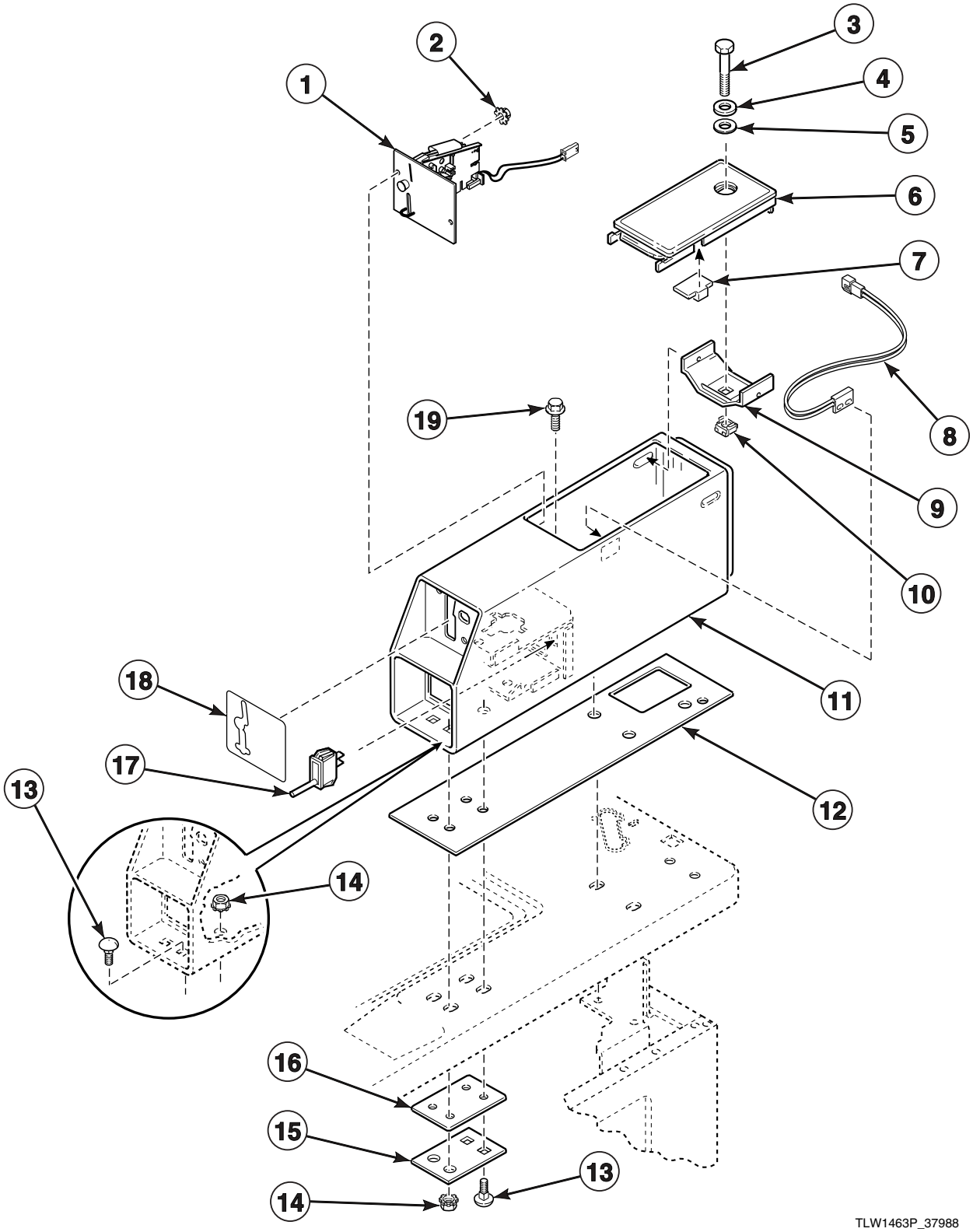

© Copyright, Alliance Laundry Systems LLC – DO NOT COPY or TRANSMIT

Coin Drop, Meter Case and Service Door

REF	PART NO.	DESCRIPTION	COMMENTS
1	38479	Single Coin Drop Assembly	U.S.A.; Currency $.25
	38467	Dual Coin Drop Assembly	Australia; Currency $.20 / $1.00
	38464	Single Coin Drop Assembly	Canada; Currency $.25
	200578	Dual Coin Drop Assembly	Canada; Currency $.25 / $1.00
	38472	Dual Coin Drop Assembly	England; Currency 20 Pence / 1 Pound
	38519	Dual Coin Drop Assembly	Japan; Currency 100 Yen / 500 Yen
	38521	Dual Coin Drop Assembly	Korea; Currency 100 Won / 500 Won
	38522	Dual Coin Drop Assembly	New Zealand; Currency $.20 / $1.00
	39157	Dual Coin Drop Assembly	Israel; Currency 1/5 Shekel
	38462	Single Coin Drop Assembly	Token; Currency STD-118-1
	38463	Single Coin Drop Assembly	Token; Currency STD-118-5
	38963	Single Coin Drop Assembly	Token; Currency STD-118-16
2	29786	Locknut	
3	503673	Screw	
4	35917	Washer	
5	35774	Washer	Vinyl
6	35798*P	Service Door	
7	501453	Magnet	
8	34599	Switch	
9	30642	Locking Bracket	
10	30647	Retainer Nut	
11	38542*	Meter Case	
12	26354	Gasket	
13	02505	Carriage Bolt	
14	29786	Locknut	
15	35525	Bracket	
16	35526	Gasket	
17	504570	Switch	
18	38676	Front Overlay	Dual coin drops
	38717	Front Overlay	Single coin drop; U.S.A.
	38675	Front Overlay	All other single coin drops
19	36048	Screw	

*** Add Letter To Designate Color. L - Almond W - White**

© Copyright, Alliance Laundry Systems LLC – DO NOT COPY or TRANSMIT

Control Panel, Control Hood and Controls

Models EC2921*A3059 and ZC2921*A3059

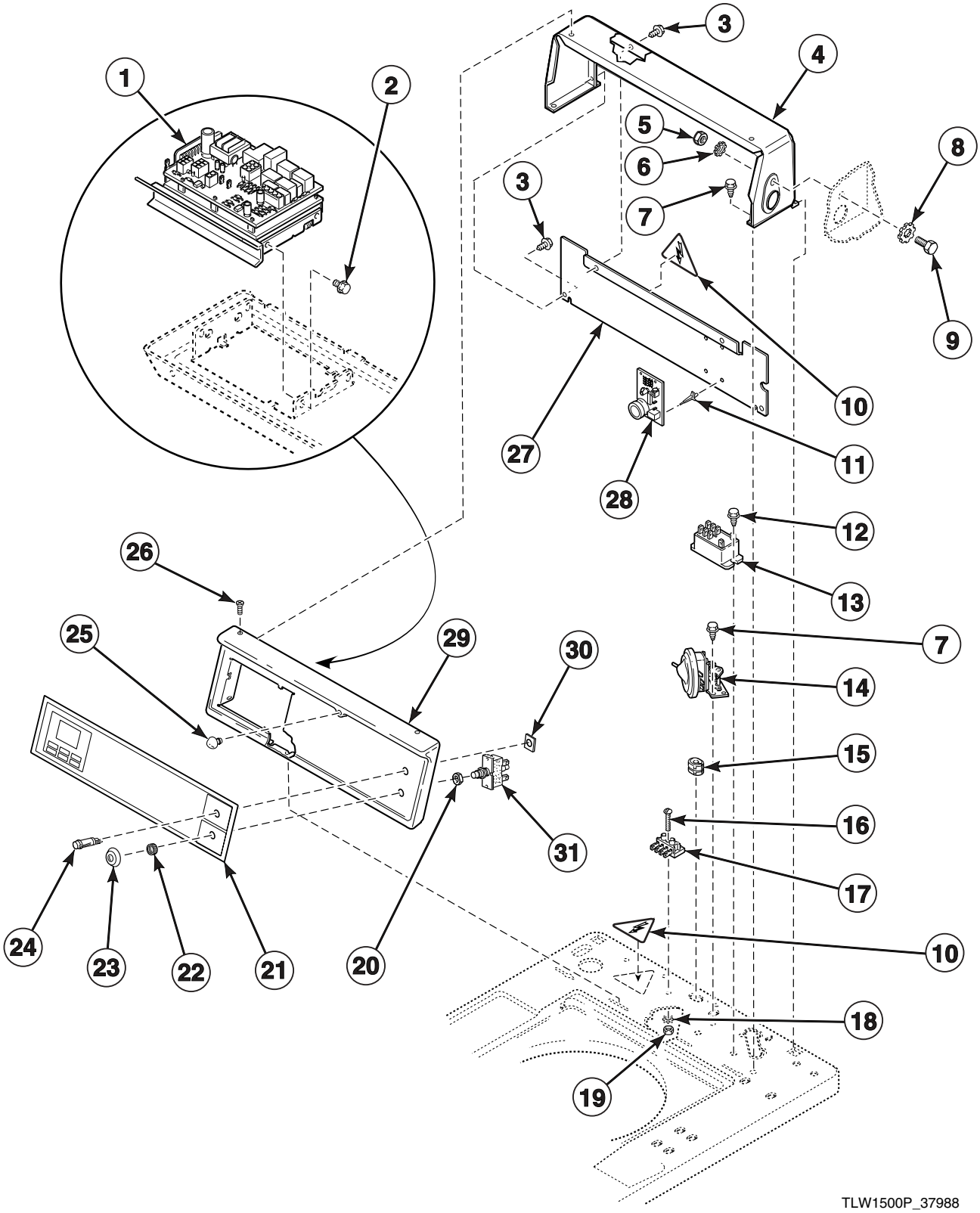

© Copyright, Alliance Laundry Systems LLC – DO NOT COPY or TRANSMIT

Control Panel, Control Hood and Controls

REF	PART NO.	DESCRIPTION	COMMENTS
1	N/A	Control and Shield	
2	501524	Screw	
3	23222	Screw	
4	37075*	Control Hood	
5	52566	Locknut	
6	02431	Lockwasher	
7	23962	Screw	
8	M400017	Lockwasher	
9	02916	Cap Screw	
10	502511	Sticker	
11	501523	Support	
12	501086	Screw	
13	502501	Relay	
14	35889	Pressure Switch	
15	36957	Strain Relief	
16	Q6516	Screw	
17	36841	Terminal Block	
18	21734	Lockwasher	
19	02788	Nut	
20	52947	Nut	
21	36972	Control Panel Overlay	Model EC2921*A3059
	36973	Control Panel Overlay	Model ZC2921*A3059
22	24206	Knurled Nut	
23	N/A	Switch Collar	
24	36968	Indicator Light	
25	32648	Bumper	
26	500226	Screw	Phillips head
	35528	Screw	Torx head; Refer to *Special Tools* section for Torx Bit and Holder
27	38267	Control Hood Rear Cover	
28	37269	Lid Lock Control	
29	N/A	Control Panel Frame	
30	34762	Push-On Clip	
31	55882	Push-to-Start Switch	

*** Add Letter To Designate Color. L - Almond W - White**

N/A = Part no longer available

© Copyright, Alliance Laundry Systems LLC – DO NOT COPY or TRANSMIT

Cabinet Top, Loading Door, Lid Lock and Shield

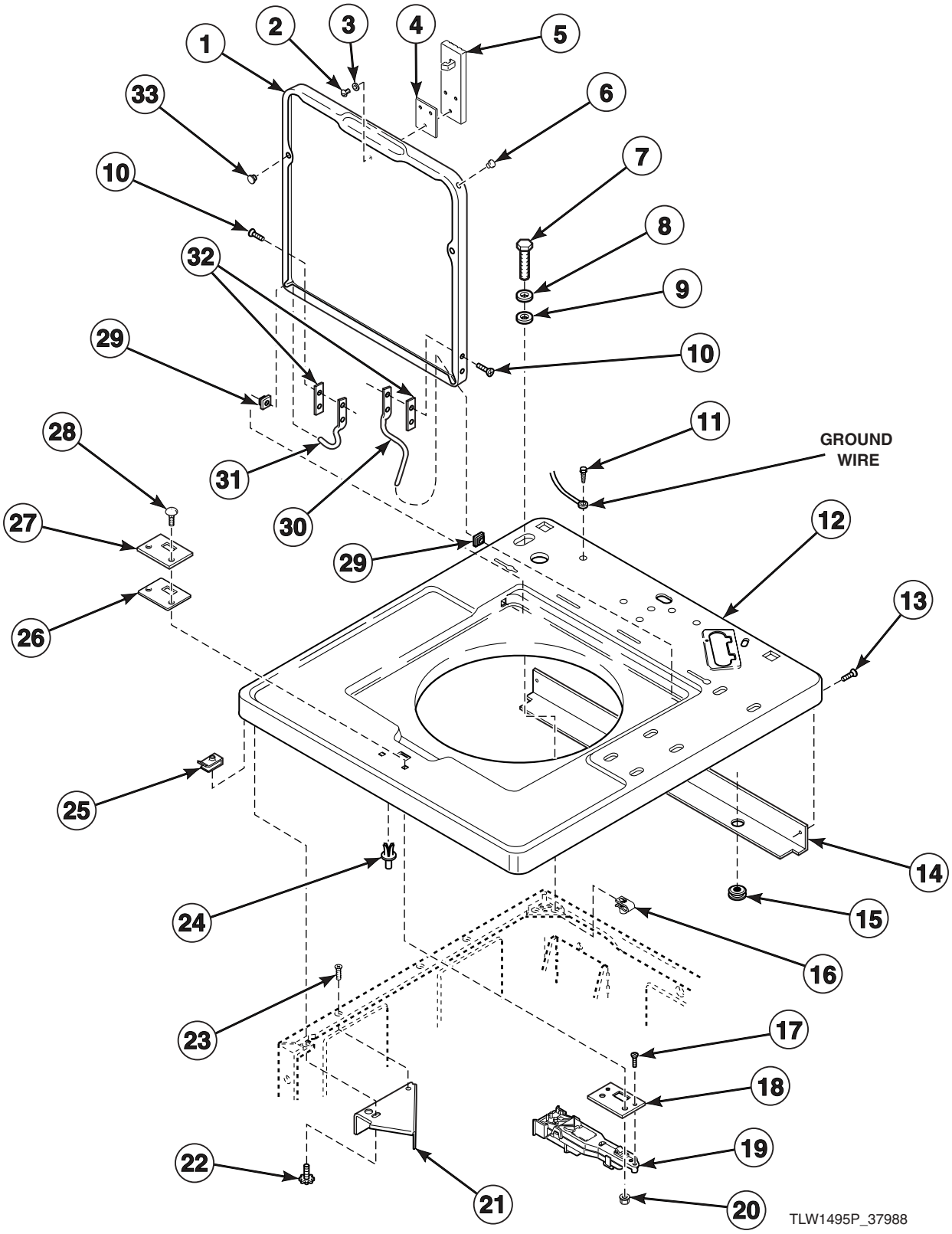

© Copyright, Alliance Laundry Systems LLC – DO NOT COPY or TRANSMIT

Cabinet Top, Loading Door, Lid Lock and Shield

REF	PART NO.	DESCRIPTION	COMMENTS
1	200892*P	Loading Door	
2	Q6695	Screw	
3	21643	Washer	
4	29677	Gasket	
5	29674	Latch	
6	34153	Plug	
7	503673	Screw	Optional, for added security
8	35917	Washer	Metal; Optional, for added security
9	35774	Washer	Plastic; Optional, for added security
10	34337	Screw	
11	52909	Screw	
12	37080*	Cabinet Top	Metered models
	N/A	Cabinet Top	Non-Metered models
13	35527	Screw	Refer to *Special Tools* section for Torx Bit and Holder
14	39744	Shield	
15	80262	Grommet	
16	27222	Retainer Nut	Optional, for added security
17	22649	Screw	
18	29676	Plate	
19	29678	Lid Lock	
20	22001	Nut	
21	36034	Director Bracket	
22	23008	Screw	
23	N/A	Screw	
24	56534	Support	
25	36020	Speed Nut	
26	30378	Gasket	
27	37828	Cover Plate	
28	32184	Screw	
29	36474	Bushing	
30	36437	Hinge	Right
31	36438	Hinge	Left
32	34338	Gasket	Through Serial No. 9511056682
33	21685	Bumper	

*** Add Letter To Designate Color. L - Almond W - White**

N/A = Part no longer available

© Copyright, Alliance Laundry Systems LLC – DO NOT COPY or TRANSMIT

Out-of-Balance Switch

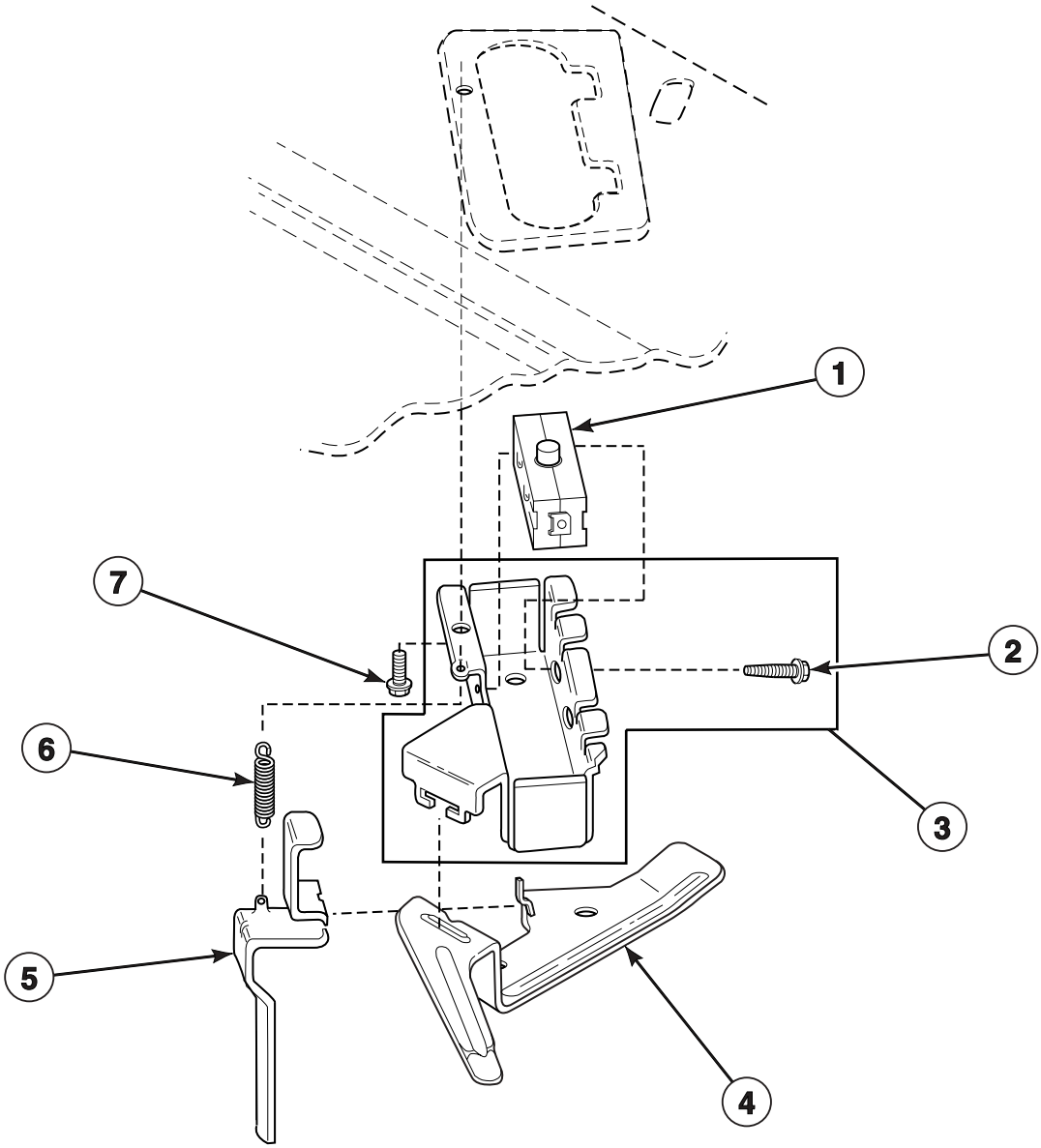

W295P_37988

© Copyright, Alliance Laundry Systems LLC – DO NOT COPY or TRANSMIT

Out-of-Balance Switch

REF	PART NO.	DESCRIPTION	COMMENTS
1	33445	Switch	Models EC2921*A3059 and ZC2921*A3059
	33527	Switch	All other models
2	36510	Screw	
3	36497P	Switch Holder Kit	Includes (2) of item 2
4	33441	Actuator Arm	
5	33442	Lever	
6	33443	Spring	
7	23962	Screw	

*** Add Letter To Designate Color. L - Almond W - White**

© Copyright, Alliance Laundry Systems LLC – DO NOT COPY or TRANSMIT

Motor, Mounting Bracket, Belt, Pump and Idler Assembly

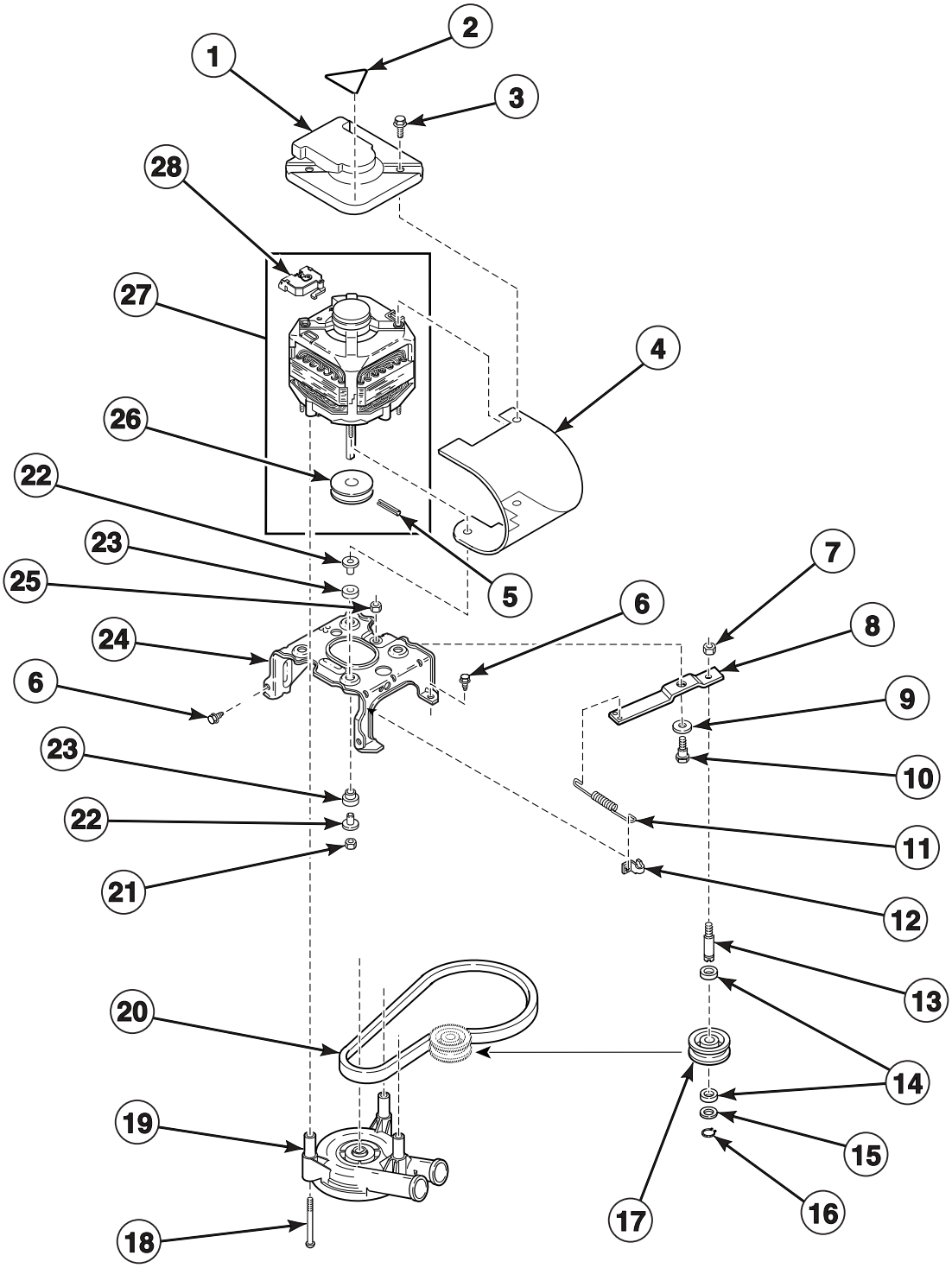

© Copyright, Alliance Laundry Systems LLC – DO NOT COPY or TRANSMIT

Motor, Mounting Bracket, Belt, Pump and Idler Assembly

REF	PART NO.	DESCRIPTION	COMMENTS
1	34754	Motor Shield	
2	502506	Sticker	
3	36639	Screw	
4	36965	Motor Shield	
5	N/A	Roll Pin	
6	503661	Screw	
7	28803	Locknut	
8	37443	Idler Lever	
9	81392	Washer	
10	27229	Shoulder Bolt	
11	37606	Idler Lever Spring	
12	28849	Clip	
13	28802	Idler Shaft	
14	29443	Washer	Felt
15	52549	Washer	Nylatron
16	23748	Retainer Ring	
17	28800	Idler Pulley	
18	34565	Screw	
19	200937	Pump Assembly	
20	35517	Belt	Agitate and spin; 50 Hertz
21	35423	Nut	
22	34791	Motor Mount Post	
23	34788	Motor Mount	Rubber
24	N/A	Mounting Bracket	
25	52566	Locknut	
26	N/A	Motor Pulley	
27	37297	Motor Assembly	230 Volt; 50/60 Hertz; One speed
	37296	Motor Assembly	230 Volt; 50 Hertz; Two speed
28	35632	Motor Switch	

N/A = Part no longer available

© Copyright, Alliance Laundry Systems LLC – DO NOT COPY or TRANSMIT

Contactor Box, Relays, Transformer and Fuse Holders

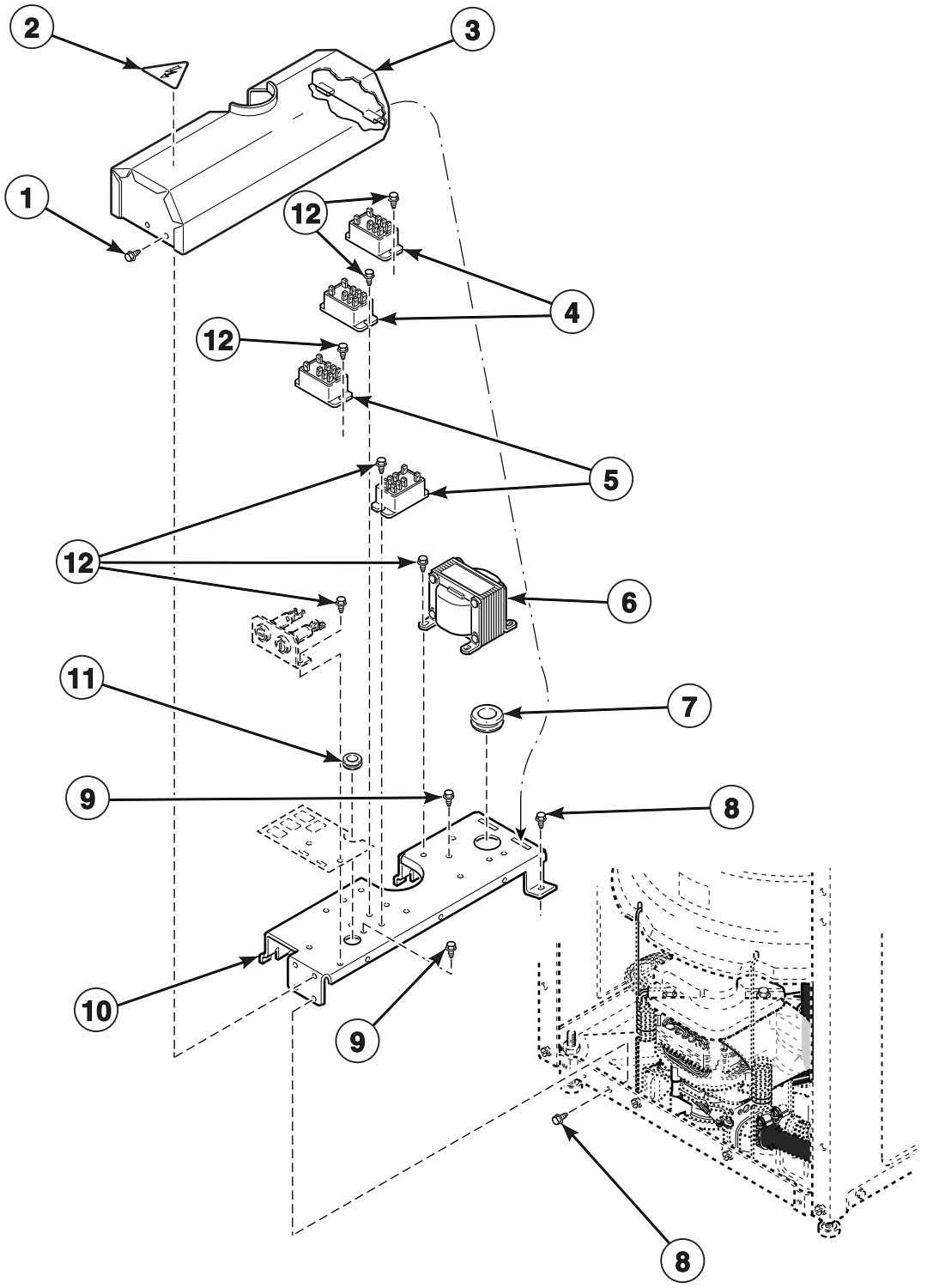

© Copyright, Alliance Laundry Systems LLC – DO NOT COPY or TRANSMIT

Contactor Box, Relays, Transformer and Fuse Holders

REF	PART NO.	DESCRIPTION	COMMENTS
1	52909	Screw	
2	502511	Sticker	
3	N/A	Contactor Box Cover	
4	502501	Relay	Normally open
5	37055	Relay	Normally open/Normally closed
6	M412477	Transformer	
7	N/A	Grommet	
8	503661	Screw	
9	20530	Screw	Ground
10	N/A	Contactor Box Base	
11	80262	Grommet	
12	501086	Screw	

N/A = Part no longer available

© Copyright, Alliance Laundry Systems LLC – DO NOT COPY or TRANSMIT

Fuse Holders and Bracket

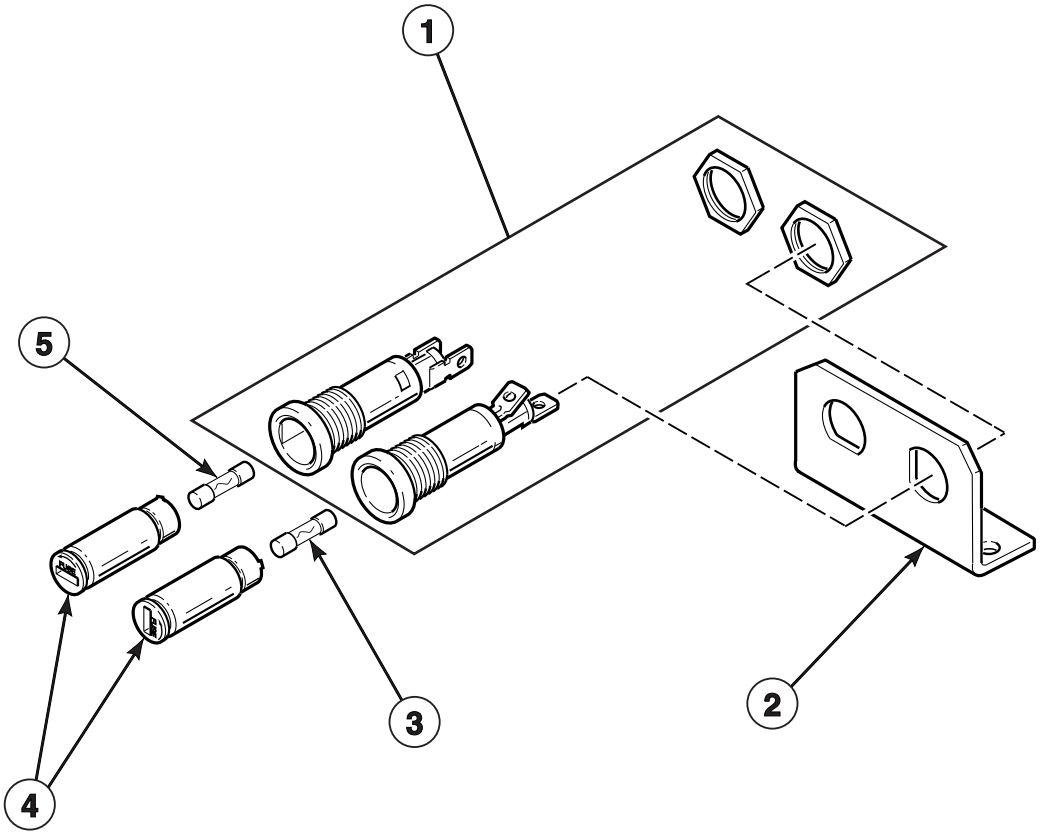

W297P_37988

© Copyright, Alliance Laundry Systems LLC – DO NOT COPY or TRANSMIT

Fuse Holders and Bracket

REF	PART NO.	DESCRIPTION	COMMENTS
1	502591	Fuse Holder Body	
2	502589	Bracket	
3	502592	Fuse	Secondary; 3.15 Amp
4	502811	Fuse Holder Cap	
5	502593	Fuse	Primary; 400 MA

© Copyright, Alliance Laundry Systems LLC – DO NOT COPY or TRANSMIT

Inlet Hose, Fill Hose and Mixing Valve Mounting Bracket

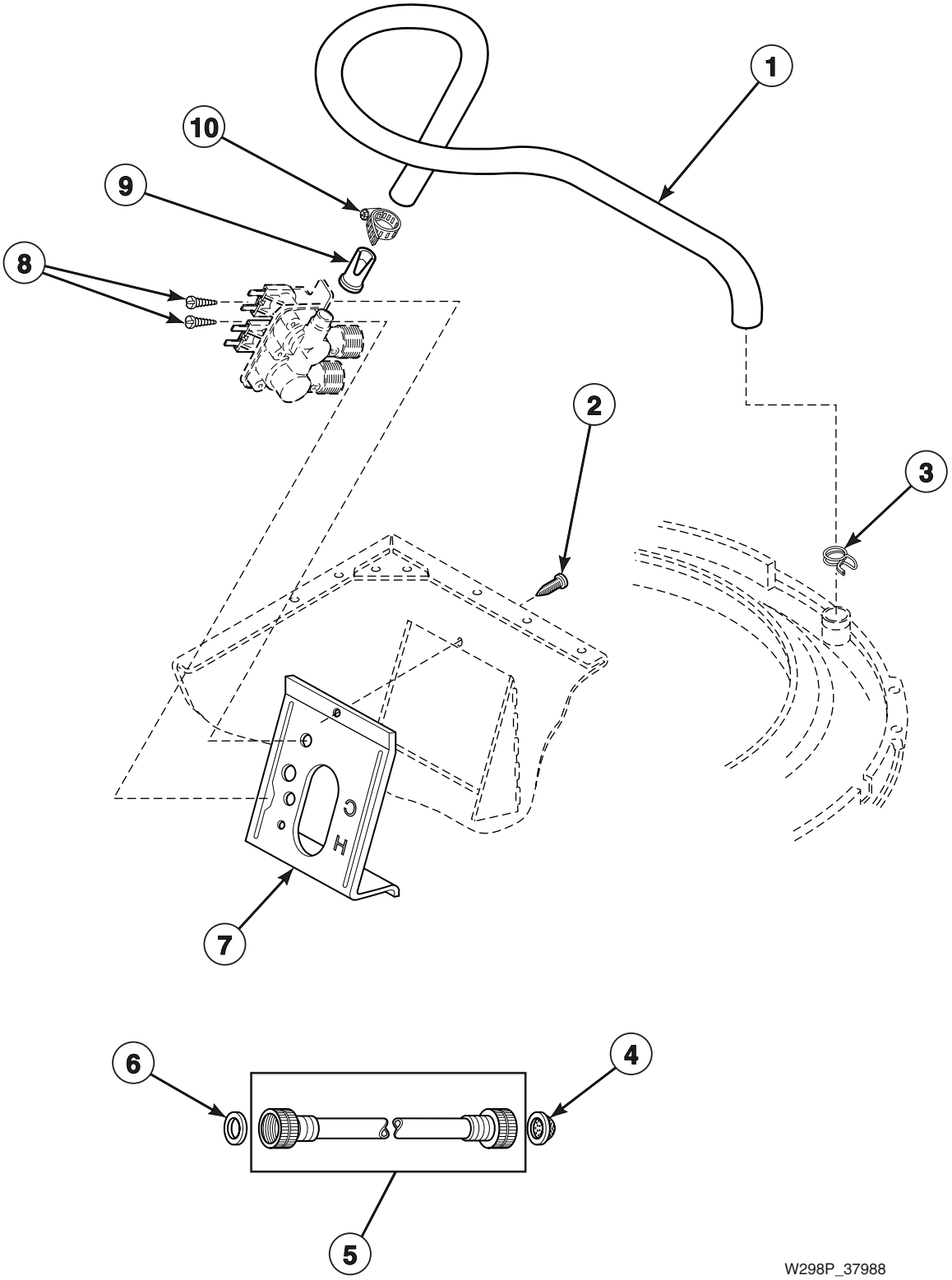

© Copyright, Alliance Laundry Systems LLC – DO NOT COPY or TRANSMIT

Inlet Hose, Fill Hose and Mixing Valve Mounting Bracket

REF	PART NO.	DESCRIPTION	COMMENTS
1	38155	Fill Hose	
2	33562	Screw	
3	29210	Hose Clamp	Gold
4	N/A	Filter Washer	
5	38349P	Inlet Hose Assembly	Four foot; Hoses are equipped with one metric hose coupling and one standard hose coupling
	37380	Inlet Hose Assembly	Eight foot; Hoses are equipped with one metric hose coupling and one standard hose coupling
	37381	Inlet Hose Assembly	Ten foot; Hoses are equipped with one metric hose coupling and one standard hose coupling
6	20290	Hose Washer	
7	39407	Mixing Valve Mounting Bracket	
8	501086	Screw	
9	34500	Backflow Preventer	
10	36801	Hose Clamp	

N/A = Part no longer available

© Copyright, Alliance Laundry Systems LLC – DO NOT COPY or TRANSMIT

Mixing Valve Assembly

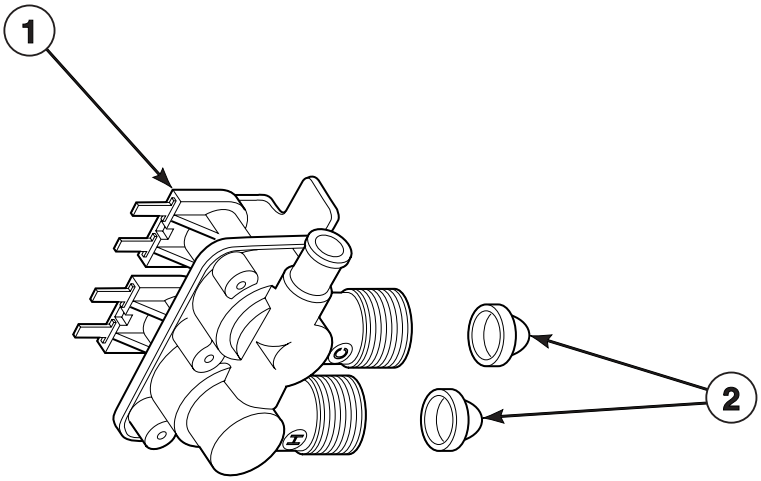

W284P_37988

© Copyright, Alliance Laundry Systems LLC – DO NOT COPY or TRANSMIT

Mixing Valve Assembly

REF	PART NO.	DESCRIPTION	COMMENTS
1	37061	Mixing Valve Assembly	
2	F270200	Inlet Screen	

© Copyright, Alliance Laundry Systems LLC – DO NOT COPY or TRANSMIT

Agitator, Drive Bell, Seal Kit, Washtub and Hub

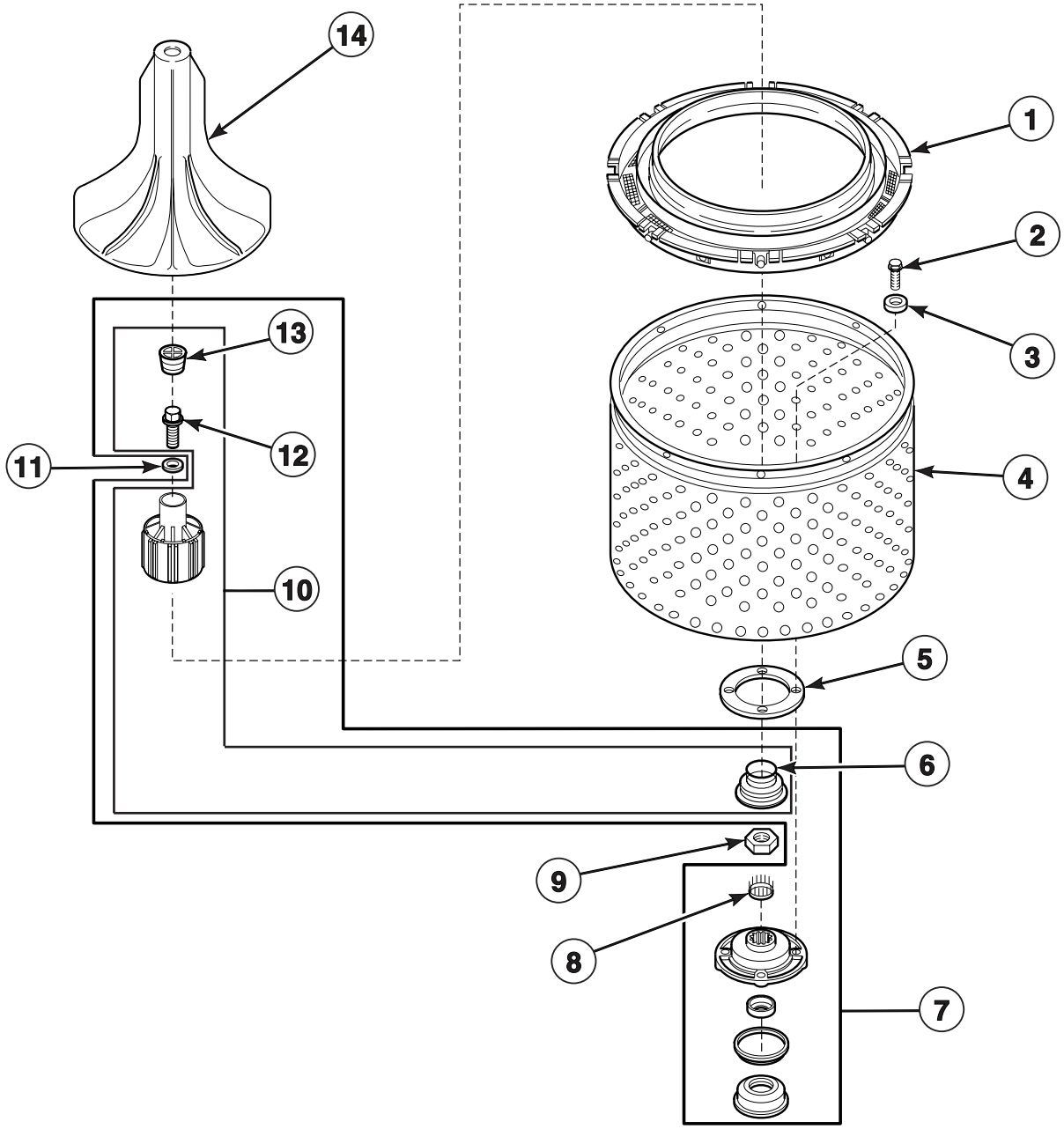

W227P_37988

© Copyright, Alliance Laundry Systems LLC – DO NOT COPY or TRANSMIT

Agitator, Drive Bell, Seal Kit, Washtub and Hub

REF	PART NO.	DESCRIPTION	COMMENTS
1	32990	Clothes Guard	
2	27202	Cap Screw	
3	28094	Gasket	
4	39387P	Washtub	Stainless steel
5	39122	Gasket	
6	36425	Seal	
7	495P3A	Hub and Seal Kit	Includes 32857 cover gasket and items 6, 8 and 10; Does not include 27615P sealant
8	29728	Splined Insert	
9	29220	Locknut	
10	39508	Drive Bell and Seal Kit	Includes items 6, 12 and 13
11	36472	O-Ring	
12	39432	Shoulder Screw	
13	36511	Plug	
14	33513	Agitator	

© Copyright, Alliance Laundry Systems LLC – DO NOT COPY or TRANSMIT

Outer Tub, Cover and Pressure Hose

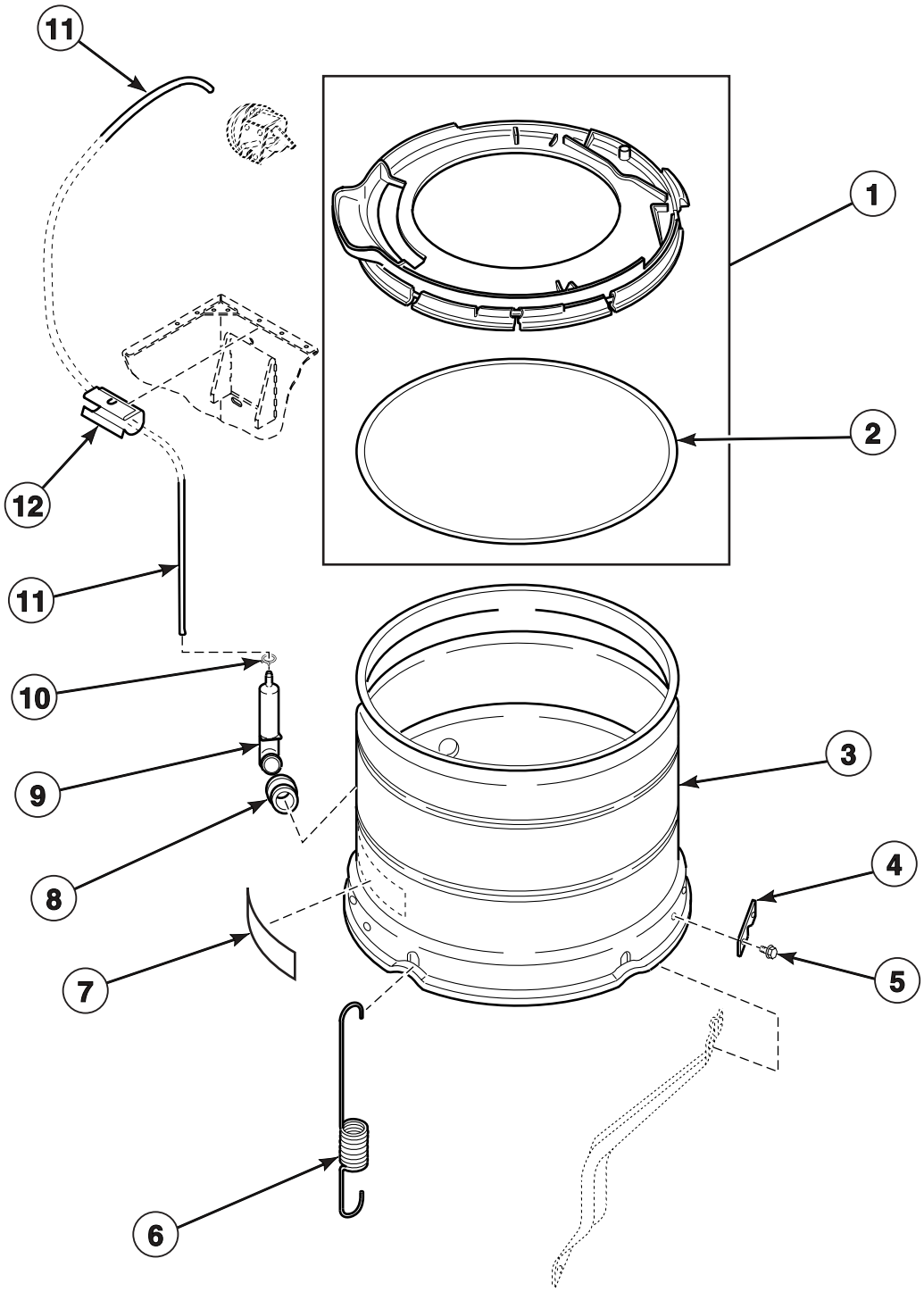

TLW1470P_37988

© Copyright, Alliance Laundry Systems LLC – DO NOT COPY or TRANSMIT

Outer Tub, Cover and Pressure Hose

REF	PART NO.	DESCRIPTION	COMMENTS
1	36025P	Outer Tub Cover Assembly	Includes item 2
2	32857	Gasket	
3	34439P	Outer Tub	
4	27926	Leg Plate	
5	35369	Screw	
6	35947	Centering Spring	
7	500049	Sticker	
8	29175	Grommet	
9	30907	Pressure Bulb	
10	39282	Hose Clamp	
11	39125	Pressure Hose	
12	36985	Clip	

© Copyright, Alliance Laundry Systems LLC – DO NOT COPY or TRANSMIT

Transmission Assembly and Balance Ring

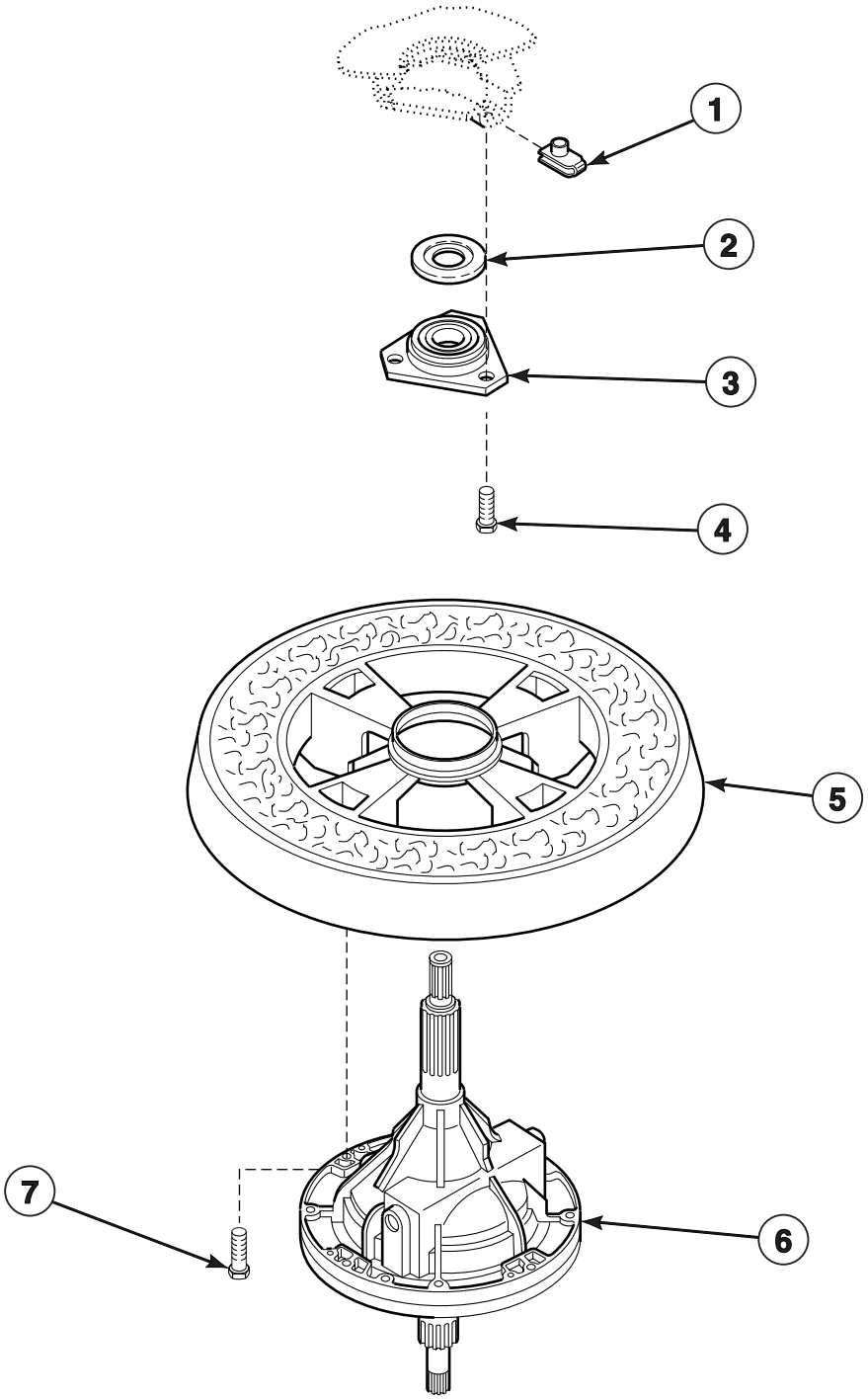

W234P_37988

© Copyright, Alliance Laundry Systems LLC – DO NOT COPY or TRANSMIT

Transmission Assembly and Balance Ring

REF	PART NO.	DESCRIPTION	COMMENTS
	27604P	Anti-Seize Compound	Apply to the smooth area of both the upper and lower transmission tubes
1	27222	Retainer Nut	
2	27187	Flinger	Through Serial No. 9510053575
3	27182	Bearing Housing Assembly	
4	36991	Cap Screw	
5	34731	Balance Ring	
6	34526	Transmission Assembly	Refer to *Transmission Assembly* section for component parts
7	N/A	Cap Screw	

N/A = Part no longer available

© Copyright, Alliance Laundry Systems LLC – DO NOT COPY or TRANSMIT

Transmission Assembly

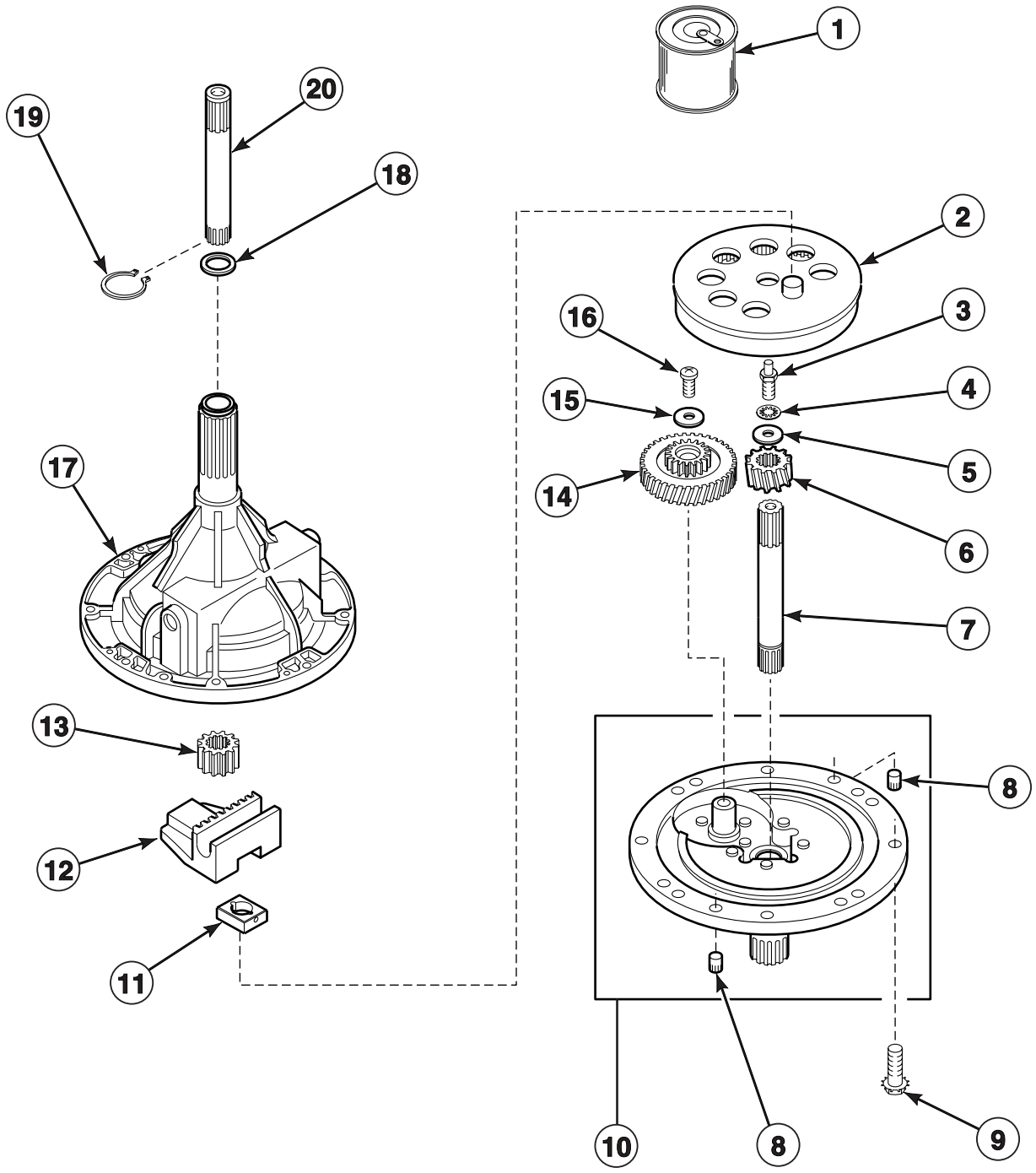

W157P_37988

© Copyright, Alliance Laundry Systems LLC – DO NOT COPY or TRANSMIT

Transmission Assembly

REF	PART NO.	DESCRIPTION	COMMENTS
	37577	Sealant	Use between transmission case and cover
1	27243	Transmission Oil	1 fill
2	26577	Internal Gear	
3	27030	Special Screw	
4	21456	Lockwasher	
5	26509	Washer	
6	36562	Drive Pinion	
7	34853	Input Shaft	
8	27172	Dowel Pin	Through Serial No. 9604069377
9	32814	Screw	
10	38290	Transmission Cover Assembly	
11	26493	Slide	
12	31526	Rack	
13	27003	Agitator Pinion	
14	29161	Reduction Gear	
15	29260	Washer	
16	29273	Screw	
17	33223	Transmission Case Assembly	
18	35092	Washer	
19	27197	Retainer Ring	
20	36570	Output Shaft	

© Copyright, Alliance Laundry Systems LLC – DO NOT COPY or TRANSMIT

Bearing Housing, Brake, Pulley and Pivot Dome

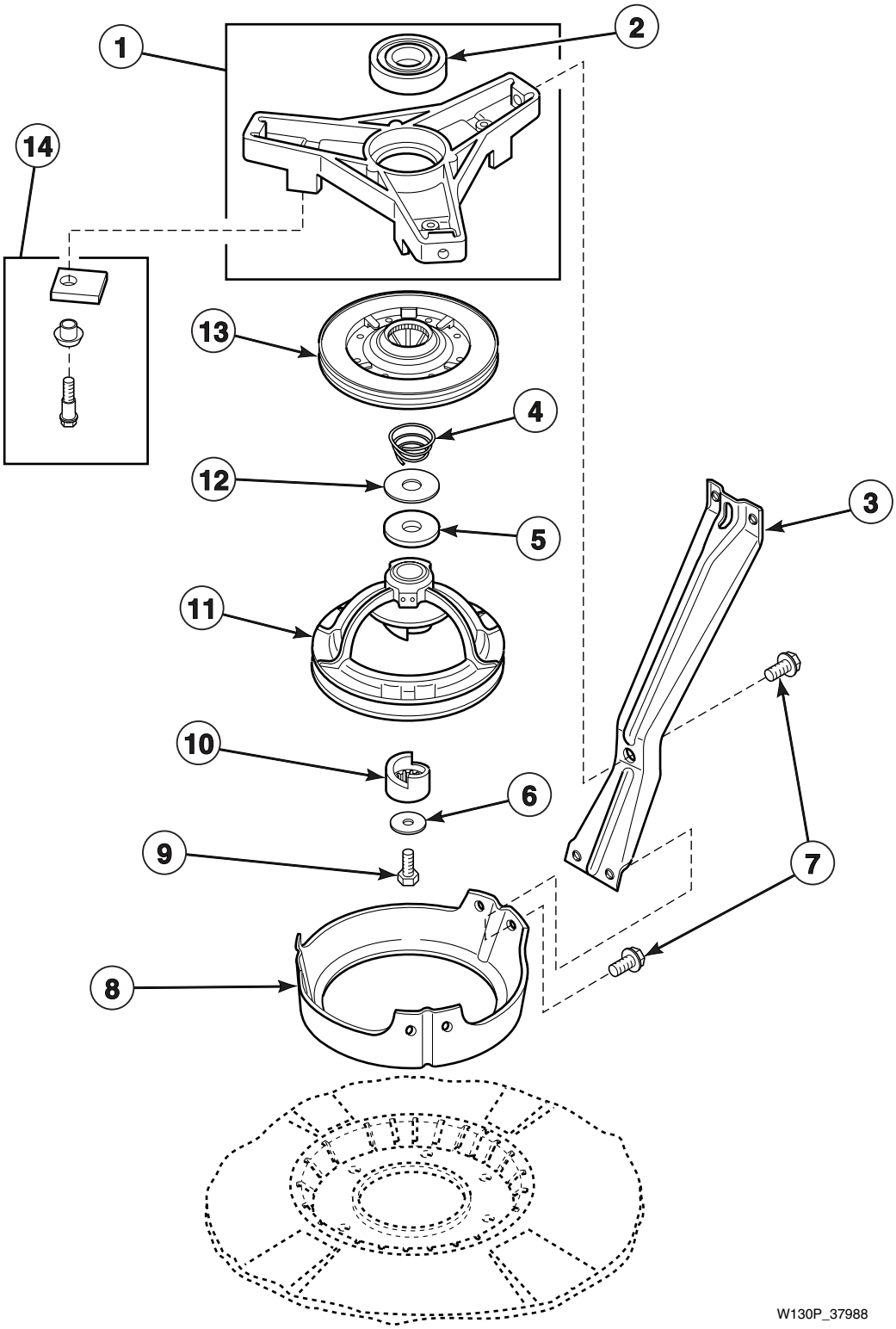

© Copyright, Alliance Laundry Systems LLC – DO NOT COPY or TRANSMIT

Bearing Housing, Brake, Pulley and Pivot Dome

REF	PART NO.	DESCRIPTION	COMMENTS
	26594P	Silicone Lubricant	Apply small amount to each new brake pad
1	35746	Bearing Housing Assembly	
2	28944R	Bearing	
3	34792	Support Leg	
4	33435	Spring	Through Serial No. 9606029040
5	27015	Washer	Thick
6	26509	Washer	
7	35369	Screw	
8	34470	Pivot Dome	
9	27220	Screw	
10	27018	Helix	
11	35310	Pulley Assembly	
12	35535	Washer	Thin
13	38505P	Brake Assembly	
14	548P3	Brake Pad Kit	Includes three pads, sleeves and screws

© Copyright, Alliance Laundry Systems LLC – DO NOT COPY or TRANSMIT

Drain Hose and Siphon Break Kit

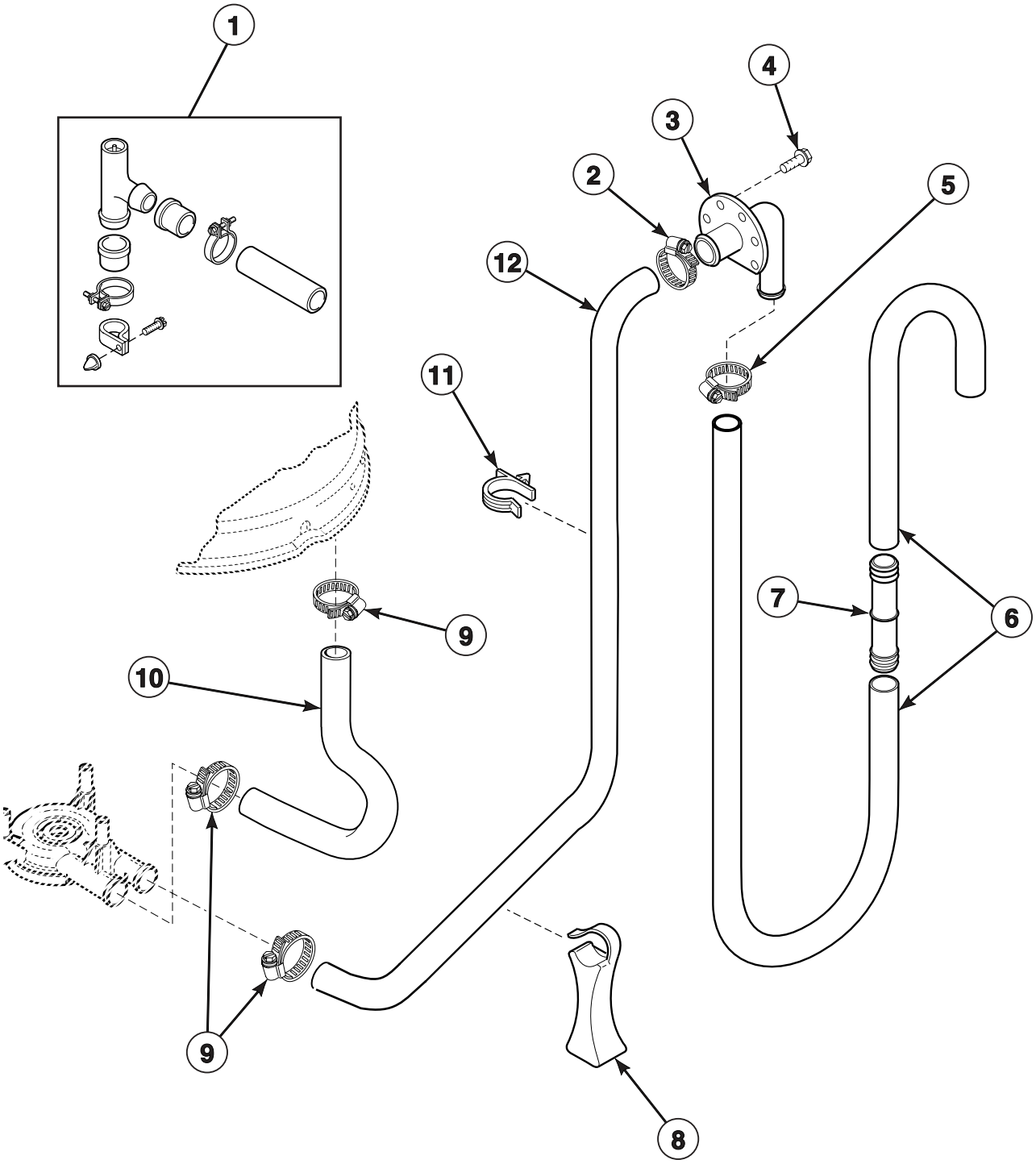

W219P_37988

© Copyright, Alliance Laundry Systems LLC – DO NOT COPY or TRANSMIT

Drain Hose and Siphon Break Kit

REF	PART NO.	DESCRIPTION	COMMENTS
	406P3	Drain Extension Kit	Use with No. 20616 drain hose; Order by the foot, as required
1	562P3	Siphon Break Kit	Siphon break kit MUST be installed in drain hose if drain receptacle is lower than cabinet top of washer
2	20391	Hose Clamp	
3	36990	Drain Hose Elbow	
4	52909	Screw	
5	20211	Hose Clamp	
6	28293	Drain Hose	If drain hose must be shortened, cut hose between molded end and molded elbow; Use item 7 to splice hose
7	25863	Hose Coupler	
8	36522	Hose Support	
9	36802	Hose Clamp	
10	35752	Tub-To-Pump Hose	
11	36014	Hose Clip	
12	35921	Pump-to-Elbow Hose	

© Copyright, Alliance Laundry Systems LLC – DO NOT COPY or TRANSMIT

Front Panel, Base Assembly and Cabinet Assembly

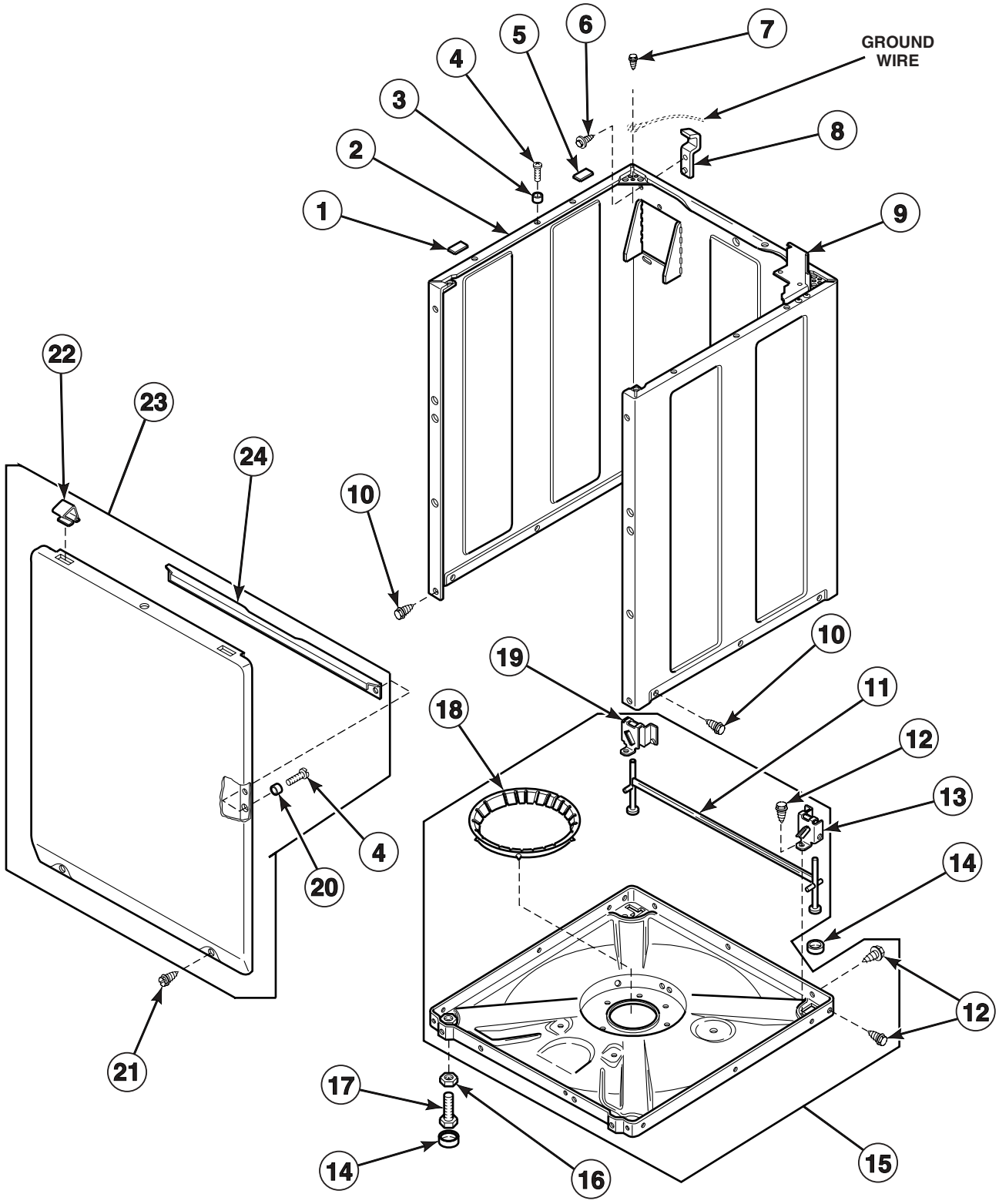

© Copyright, Alliance Laundry Systems LLC – DO NOT COPY or TRANSMIT

Front Panel, Base Assembly and Cabinet Assembly

REF	PART NO.	DESCRIPTION	COMMENTS
1	56128	Bumper Pad	Thin
2	38612*P	Cabinet Assembly	
3	56079	Guide Lug	
4	39733	Screw	
5	36226	Bumper Pad	Thick
6	51780	Screw	
7	23962	Screw	
8	27103	Hinge	
9	35867	Mounting Bracket	Included with cabinet assembly; Metered models
10	27196	Screw	
11	34443	Leveling Leg and Stabilizer Bar Assembly	
12	35148	Screw	
13	36036	Bracket	Right
14	34318	Rubber Foot	
15	36599P	Base Assembly	Includes items 11, 12 13, 18 and 19
16	21899	Locknut	
17	34319	Leveling Leg	
18	36108	Snubber Pad and Isolator Assembly	
19	36037	Bracket	Left
20	28102	Guide Lug	
21	27196	Screw	Slotted hex screw
	35527	Screw	Torx head; Refer to *Special Tools* section for Torx Bit and Holder
22	35865	Hold-Down Clip	
23	34656*P	Front Panel	Includes items 4, 20, 22 and 24
24	35097	Brace	

*** Add Letter To Designate Color. L - Almond W - White**

© Copyright, Alliance Laundry Systems LLC – DO NOT COPY or TRANSMIT

Mixing Valve and Motor Disconnect Blocks, Terminals and Terminal Extractor Tool

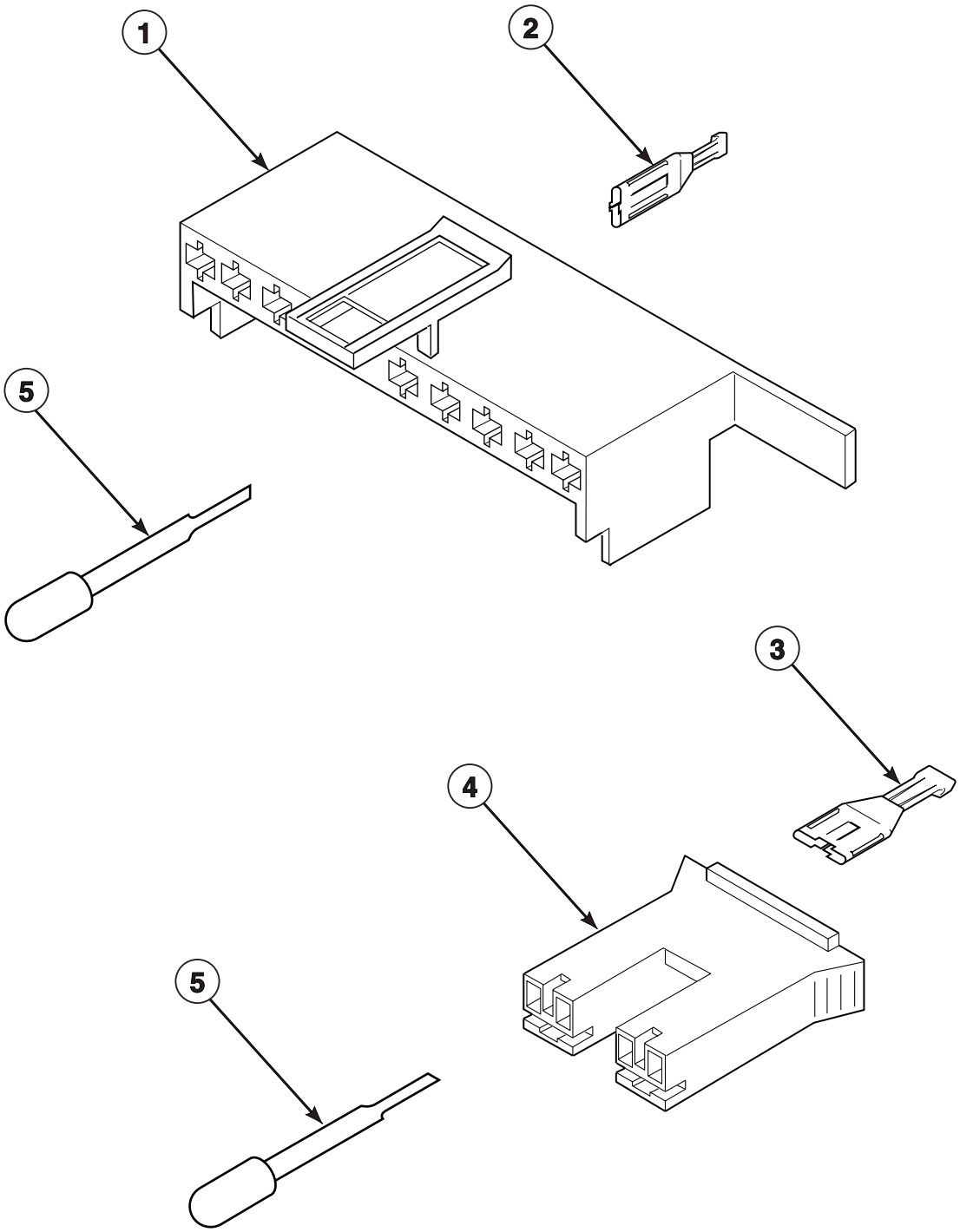

W134P_37988

© Copyright, Alliance Laundry Systems LLC – DO NOT COPY or TRANSMIT

Mixing Valve and Motor Disconnect Blocks, Terminals and Terminal Extractor Tool

REF	PART NO.	DESCRIPTION	COMMENTS
1	34677	Molex Housing	Motor
2	00188	Molex Terminal	For one or two wire application
3	00121	Spade Terminal	1/4 inch
4	34675	Mixing Valve Amp Housing	Natural
	34676	Mixing Valve Amp Housing	Red
5	283P4	Terminal Extractor Tool	

© Copyright, Alliance Laundry Systems LLC – DO NOT COPY or TRANSMIT

Power Cord and Terminals

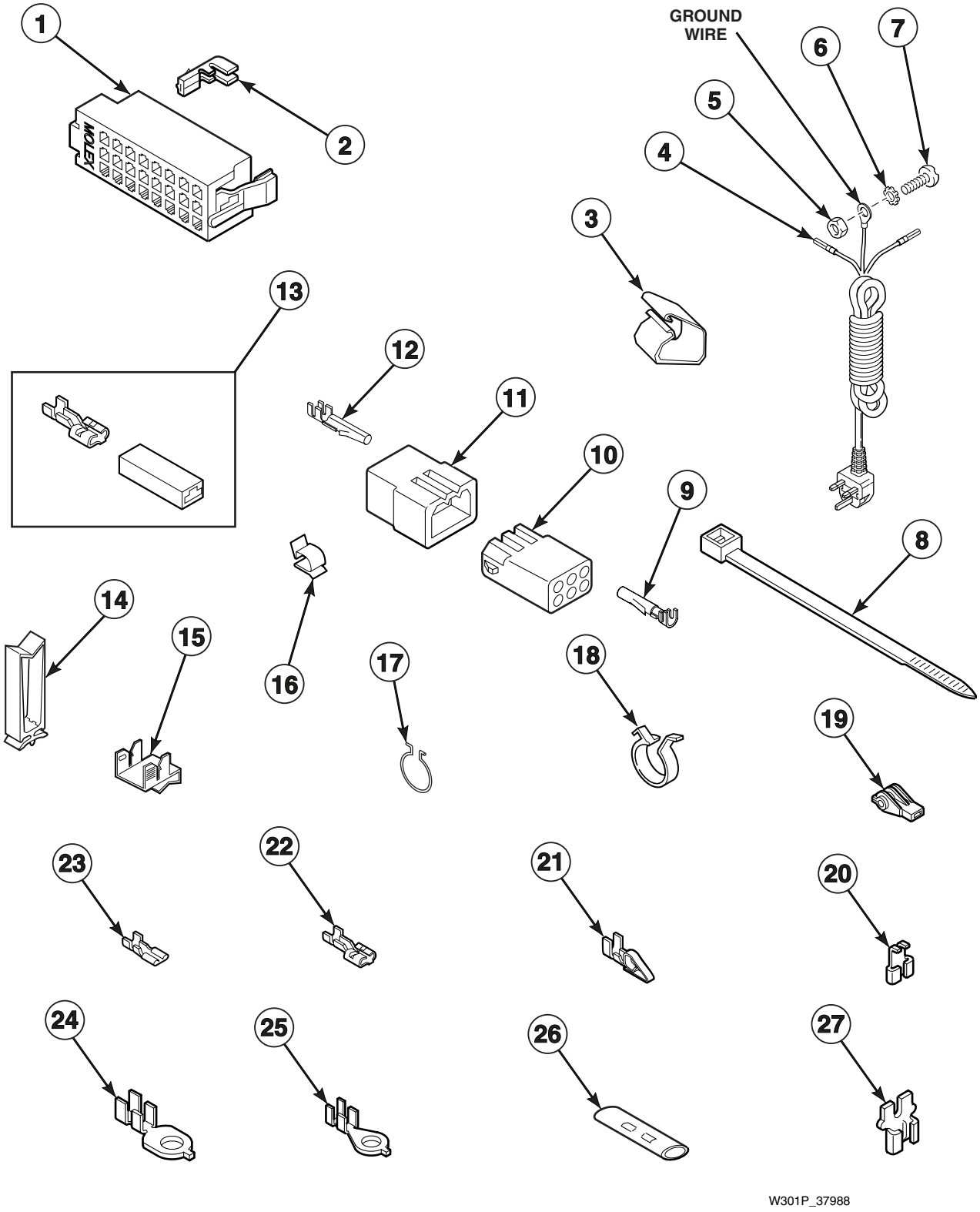

© Copyright, Alliance Laundry Systems LLC – DO NOT COPY or TRANSMIT

Power Cord and Terminals

REF	PART NO.	DESCRIPTION	COMMENTS
1	32746	Molex Housing	Right
	34123	Molex Housing	Left
2	00188	Molex Terminal	Used for one or two wire application
3	N/A	Harness Clip	
4	37179	Power Cord	
5	28447	Nut	
6	28449	Lockwasher	
7	28448	Screw	
8	55881	Wire Tie	
9	00117	Terminal	Female
10	26302	Terminal Block	1 circuit
	26708	Terminal Block	6 circuit
	26163	Terminal Block	9 circuit
11	26302	Terminal Block	1 circuit
	23041	Terminal Block	6 circuit
	23033	Terminal Block	9 circuit
12	00116	Terminal	Male
13	00234	Terminal and Housing Assembly	
14	36274	Harness Clip	
15	00161	Ground Clip	
16	21036	Cable Clip	
17	51291	Wire Clip	
18	504034	Wire Clip	
19	70210	Plastic Insulator	
20	00120	Right Angle	Flag terminal
21	N/A	Spade Terminal	Female; 1/4 inch
22	00223	Spade Terminal	Large spade
23	00112	Spade Terminal	Small spade
24	00113	Eyelet Terminal	1/4 inch ring
25	00110	Eyelet Terminal	Small shank
26	21091	Connector	
27	29673	Double Connector	

N/A = Part no longer available

© Copyright, Alliance Laundry Systems LLC – DO NOT COPY or TRANSMIT

Special Tools

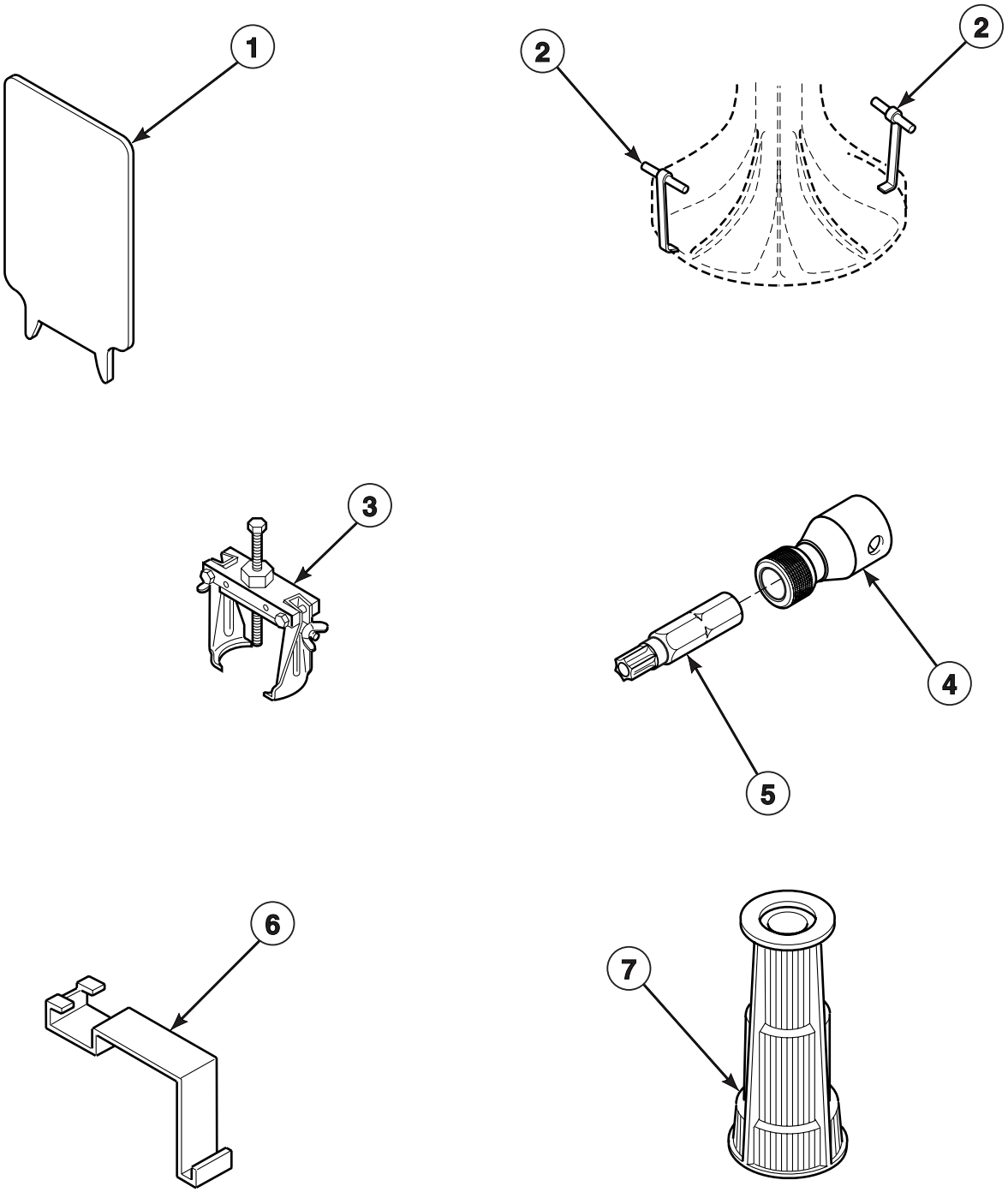

W279P_37988

© Copyright, Alliance Laundry Systems LLC – DO NOT COPY or TRANSMIT

Special Tools

REF	PART NO.	DESCRIPTION	COMMENTS
	725P3	Tool Kit	Includes items 2, 5 (282P4), 6 and 7
	294P4A	Drive Bell Arms	To update 294P4 bell tool
	294P4B	Drive Bell Bolt	To update 294P4 bell tool
1	272P4	Lid Switch Tool	Use for installing lid switch for models using 36497P switch holder
2	254P4P	Agitator Hooks	Set of two; Use to remove agitator from drive bell
3	294P4	Bell Tool	For removal and installation of drive bell to transmission shaft
4	24161	Torx Bit Holder	3/8 in. Drive; For removal and installation of shield to cabinet top and pump attaching screws
5	281P4	Tamper Resistant Bit	T15; For removal and installation of control hood security screws
	282P4	Tamper Resistant Bit	T25; For removal and installation of shield to cabinet top, pump and front panel attaching screws
6	273P4	Outer Tub Cover and Gasket Tool	Use to remove outer tub cover from outer tub and to install gasket in outer tub cover
7	293P4	Seal Tool	For installation of 36425 Seal

© Copyright, Alliance Laundry Systems LLC – DO NOT COPY or TRANSMIT

Special Tools

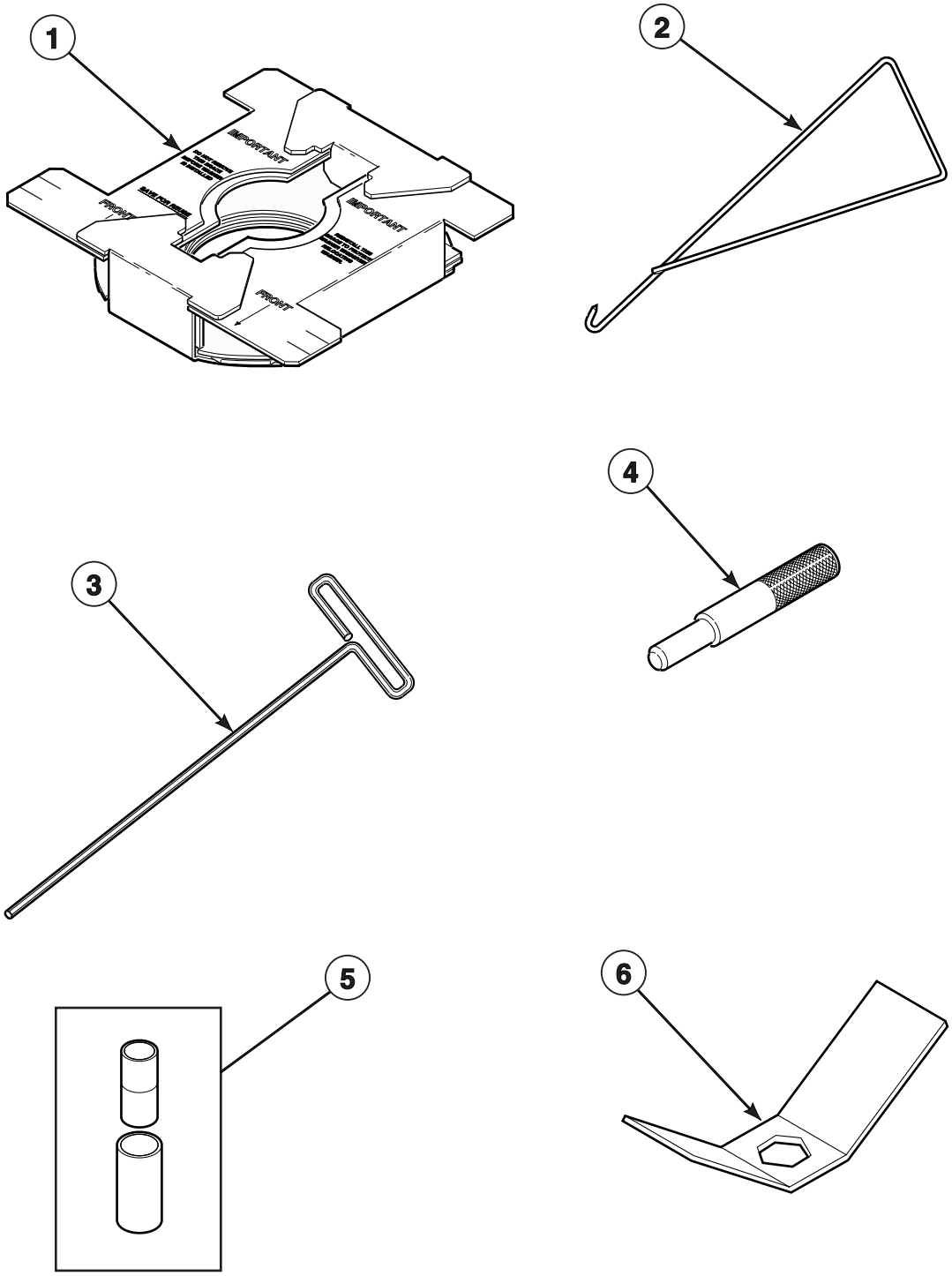

W280P_37988

© Copyright, Alliance Laundry Systems LLC – DO NOT COPY or TRANSMIT

Special Tools

REF	PART NO.	DESCRIPTION	COMMENTS
1	N/A	Washer Shipping Brace	Install whenever moving washer; Remove before use
2	321P4	Spring Hook	For removal of centering springs from outer tub
3	291P4	T-Handle Allen Wrench	For the removal and installation of the three pump assembly attaching screws
4	305P4	Guide Tool	Two required; Use guide pins in place of dowel pins when reassembling transmission cover and case
5	242P4	Brake Spring Installer	For installing brake spring
6	306P4	Hex Wrench	For removal of locknut from washtub hub

N/A = Part no longer available

© Copyright, Alliance Laundry Systems LLC – DO NOT COPY or TRANSMIT

Wire Harnesses and Wires

PART NO.	DESCRIPTION	COMMENTS
N/A	Cabinet Top Harness	
N/A	Motor Harness	
37232	Timer Harness	Models EC2111*A3059, EC2211*A3059, ZC2111*A3059 and ZC2211*A3059
36094	Timer Harness	Models EC2921*A3059 and ZC2921*A3059
N/A	Timer Harness	Model EC2011*A3059
37238	Hood Harness	Model EC2011*A3059
37199	Hood Harness	Models EC2921*A3059 and ZC2921*A3059
N/A	Hood Harness	All other models
31973	Lid Lock Harness	
45001	18 Gauge Wire	Black; Order wire by foot and terminals and connectors as required
45380	12 Gauge Wire	Orange; Order wire by foot and terminals and connectors as required

*** Add Letter To Designate Color. L - Almond W - White**

N/A = Part no longer available

NOTE: Individual wires are not available separately. Order complete wire harness or order wire by the foot. When applying terminals to wires, it is recommended that the terminals be soldered to the wires.

© Copyright, Alliance Laundry Systems LLC – DO NOT COPY or TRANSMIT

Parts Index

A

Actuator Arm
33441 19
Agitator
33513 31
Agitator Hooks
254P4P 49
Agitator Pinion
27003 37
Anti-Seize Compound
27604P 35

B

Backflow Preventer
34500 27
Balance Ring
34731 35
Base Assembly
36599P 43
Bearing
28944R 39
Bearing Housing Assembly
27182 35
35746 39
Bell Tool
294P4 49
Belt
35517 21
Bolt
29651 7
Brace
35097 43
Bracket
35525 ..... 7, 9, 13
36036 43
36037 43
502589 25
Brake Assembly
38505P 39
Brake Pad Kit
548P3 39
Brake Spring Installer
242P4 51
Bumper
21685 17
32648 ..... 11, 15
Bumper Pad
36226 43
56128 43
Bushing
36474 17

C

Cabinet Assembly
38612*P 43
Cabinet Top
37080* 17
Cable Clip
21036 47
Cap Screw
02916 ..... 5, 11, 15
27202 31
36991 35
Carriage Bolt
02505 ..... 5, 7, 9, 13
Centering Spring
35947 33
Clip
28849 21
36985 33
Clothes Guard
32990 31
Clutch
29503 7
Coin Drop Assembly
M411605 9
M411606 9
M411607 9
M411608 9
M411706 9
M411707 9
M411708 9
M411709 9
431631 9
Coin Drop Front Plate
501966 9
501978 9
Coin Funnel Kit
523P3 7
Connector
21091 47
Control Hood
37075* 11, 15
Control Hood Rear Cover
38267 ..... 11, 15
Control Knob Assembly
39897 11
Control Panel Frame
36521* 11
Control Panel Overlay
36971 11
36972 15
36973 15
Cover Plate
37828 17

D

Director Bracket
36034 17
Double Connector
29673 47
Dowel Pin
27172 37
Drain Extension Kit
406P3 41

© Copyright, Alliance Laundry Systems LLC – DO NOT COPY or TRANSMIT

Drain Hose
28293 41
Drain Hose Elbow
36990 41
Drive Bell and Seal Kit
39508 31
Drive Bell Arms
294P4A 49
Drive Bell Bolt
294P4B 49
Drive Pinion
36562 37
Dual Coin Drop Assembly
200578 13
38467 13
38472 13
38519 13
38521 13
38522 13
39157 13

E

Eyelet Terminal
00110 47
00113 47

F

Fill Hose
38155 27
Flinger
27187 35
Front Overlay
38675 13
38676 13
38717 13
Front Panel
34656*P 43
Fuse
502592 25
502593 25
Fuse Holder Body
502591 25
Fuse Holder Cap
502811 25

G

Gasket
26354 ..... 9, 13
28094 31
29677 17
30378 17
32857 33
34338 17
35526 ..... 7, 9, 13
39122 31
Grommet
29175 33
80262 ..... 17, 23
Ground Clip
00161 47
Guide Lug
28102 43
56079 43
Guide Tool
305P4 51

H

Harness Clip
36274 47
Helix
27018 39
Hex Wrench
306P4 51
Hinge
27103 43
36437 17
36438 17
Hold-Down Clip
35865 43
Hood Harness
37199 52
37238 52
Hose Clamp
20211 41
20391 41
29210 27
36801 27
36802 41
39282 33
Hose Clip
36014 41
Hose Coupler
25863 41
Hose Support
36522 41
Hose Washer
20290 27
Hub and Seal Kit
495P3A 31

I

Idler Lever
37443 21
Idler Lever Spring
37606 21
Idler Pulley
28800 21
Idler Shaft
28802 21
Indicator Light
36967 11
36968 ..... 11, 15
37472 11
Inlet Hose Assembly
37380 27
37381 27
38349P 27
Inlet Screen
F270200 29

© Copyright, Alliance Laundry Systems LLC – DO NOT COPY or TRANSMIT

Input Shaft
34853 37
Internal Gear
26577 37

K

Knurled Nut
24205 11
24206 ..... 11, 15

L

Latch
29674 17
Leg Plate
27926 33
Leveling Leg
34319 43
Leveling Leg and Stabilizer Bar Assembly
34443 43
Lever
33442 19
Lid Lock
29678 17
Lid Lock Control
37269 ..... 11, 15
Lid Lock Harness
31973 52
Lid Switch Tool
272P4 49
Loading Door
200892*P 17
Locking Bracket
30642 ..... 7, 9, 13
Locking Rod
501365 9
Locknut
21899 43
28803 21
29220 31
29786 ..... 7, 9, 13
52566 ..... 11, 15, 21
Lockwasher
M400017 ..... 5, 11, 15
02431 ..... 5, 11, 15
21456 ..... 5, 37
21734 ..... 5, 11, 15
28449 47
91176 11

M

Magnet
501453 ..... 9, 13
Meter Case
38542* 13
38542*P 9
524P3* 7
Meter Case Gasket
26354 7
Mixing Valve Amp Housing
34675 45
34676 45
Mixing Valve Assembly
37061 29
Mixing Valve Mounting Bracket
39407 27
Molex Housing
32746 47
34123 47
34677 45
Molex Terminal
00188 ..... 45, 47
Motor Assembly
37296 21
37297 21
Motor Mount
34788 21
Motor Mount Post
34791 21
Motor Shield
34754 21
36965 21
Motor Switch
35632 21
Mounting Bracket
35867 43

N

Nut
02788 ..... 11, 15
20275 5
22001 17
28447 47
29796 7
35423 21
52566 5
52947 ..... 11, 15

O

O-Ring
36472 31
Outer Tub
34439P 33
Outer Tub Cover and Gasket Tool
273P4 49
Outer Tub Cover Assembly
36025P 33
Output Shaft
36570 37

P

Pivot Dome
34470 39
Plastic Insulator
70210 47
Plate
29676 17

© Copyright, Alliance Laundry Systems LLC – DO NOT COPY or TRANSMIT

Plug
34153 17
36511 31
Power Cord
37179 47
Pressure Bulb
30907 33
Pressure Hose
39125 33
Pressure Switch
35889 ..... 11, 15
Pulley Assembly
35310 39
Pump Assembly
200937 21
Pump-to-Elbow Hose
35921 41
Push-On Clip
34762 ..... 11, 15
Push-to-Start Sticker
53738 5
Push-to-Start Switch
55882 ..... 11, 15

R

Rack
31526 37
Reduction Gear
29161 37
Relay
37055 23
502501 ..... 11, 15, 23
Retainer Nut
27222 ..... 17, 35
30647 ..... 7, 9, 13
Retainer Ring
23748 21
27197 37
Right Angle
00120 47
Rubber Foot
34318 43

S

Screw
Q6516 ..... 11, 15
Q6695 17
20530 23
21720 7
22649 17
23008 17
23222 ..... 11, 15
23962 ..... 5, 11, 15, 19, 43
27196 43
27220 39
27328 5
28448 47
29273 37
32184 17
32814 37
33562 27
34337 17
34565 21
35148 43
35369 ..... 33, 39
35527 ..... 17, 43
35528 ..... 11, 15
36048 ..... 7, 9, 13
36510 19
36639 21
39733 43
500226 ..... 11, 15
501086 ..... 11, 15, 23, 27
501524 15
503661 ..... 21, 23
503673 ..... 7, 9, 13, 17
51778 5
51780 43
52909 ..... 17, 23, 41
80399 5
Seal
36425 31
Seal Tool
293P4 49
Sealant
37577 37
Service Door
35798* 7, 9
35798*P 13
Shield
39744 17
Shoulder Bolt
27229 21
Shoulder Screw
39432 31
502431 7
Silicone Lubricant
26594P 39
Single Coin Drop Assembly
38462 13
38463 13
38464 13
38479 13
38963 13
Siphon Break Kit
562P3 41
Slide
26493 37
Snubber Pad and Isolator Assembly
36108 43
Spade Terminal
00112 47
00121 45
00223 47
Special Screw
27030 37
Speed Nut
36020 17
Splined Insert
29728 31
Spring
33435 39
33443 19
Spring Hook
321P4 51
Sticker
36592 ..... 5, 7, 9

© Copyright, Alliance Laundry Systems LLC – DO NOT COPY or TRANSMIT

37068 ..... 5, 7, 9
500049 33
502506 21
502511 ..... 11, 15, 23

Strain Relief
36957 ..... 11, 15

Support
501523 ..... 11, 15
56534 17

Support Leg
34792 39

Switch
33445 19
33527 19
34599 ..... 9, 13
504570 ..... 9, 13

Switch Holder Kit
36497P 19

T

T- Handle Allen Wrench
291P4 51

Tamper Resistant Bit
281P4 49
282P4 49

Temperature Switch
81799 11

Terminal
00116 47
00117 47

Terminal and Housing Assembly
00234 47

Terminal Block
23033 47
23041 47
26163 47
26302 47
26708 47
36841 ..... 11, 15

Terminal Extractor Tool
283P4 45

Timer Assembly
36986 7
36987 7
36988 5

Timer Bracket
35249 7

Timer Case
37733W 5

Timer Harness
36094 52
37232 52

Timer Knob Assembly
26256 5

Timer Plate
31864W 5

Tool Kit
725P3 49

Torx Bit Holder
24161 49

Transformer
M412477 23

Transmission Assembly
34526 35

Transmission Case Assembly
33223 37

Transmission Cover Assembly
38290 37

Transmission Oil
27243 37

Tub-To-Pump Hose
35752 41

W

Washer
21643 17
23225 5
26509 ..... 37, 39
27015 39
29260 37
29443 21
30627 5
35092 37
35535 39
35774 ..... 7, 9, 13, 17
35917 ..... 7, 9, 13, 17
52549 21
81392 21

Washtub
39387P 31

Wire Clip
504034 47
51291 47

Wire Tie
55881 47

Wire, 12 Gauge
45380 52

Wire, 18 Gauge
45001 52

© Copyright, Alliance Laundry Systems LLC – DO NOT COPY or TRANSMIT

Notes

© Copyright, Alliance Laundry Systems LLC – DO NOT COPY or TRANSMIT